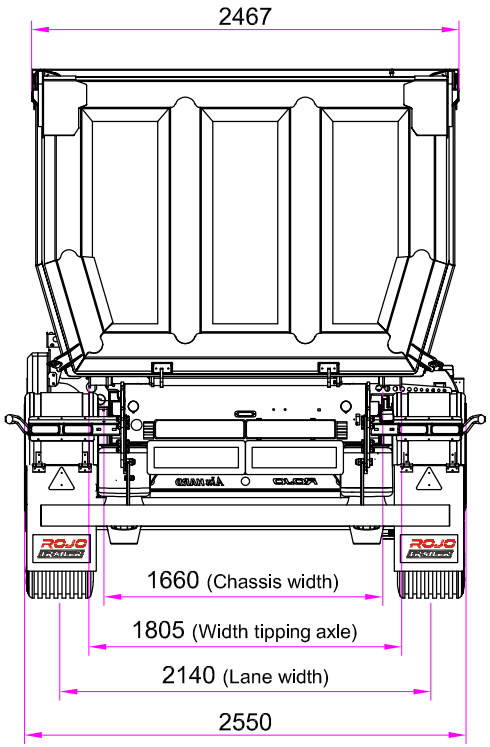

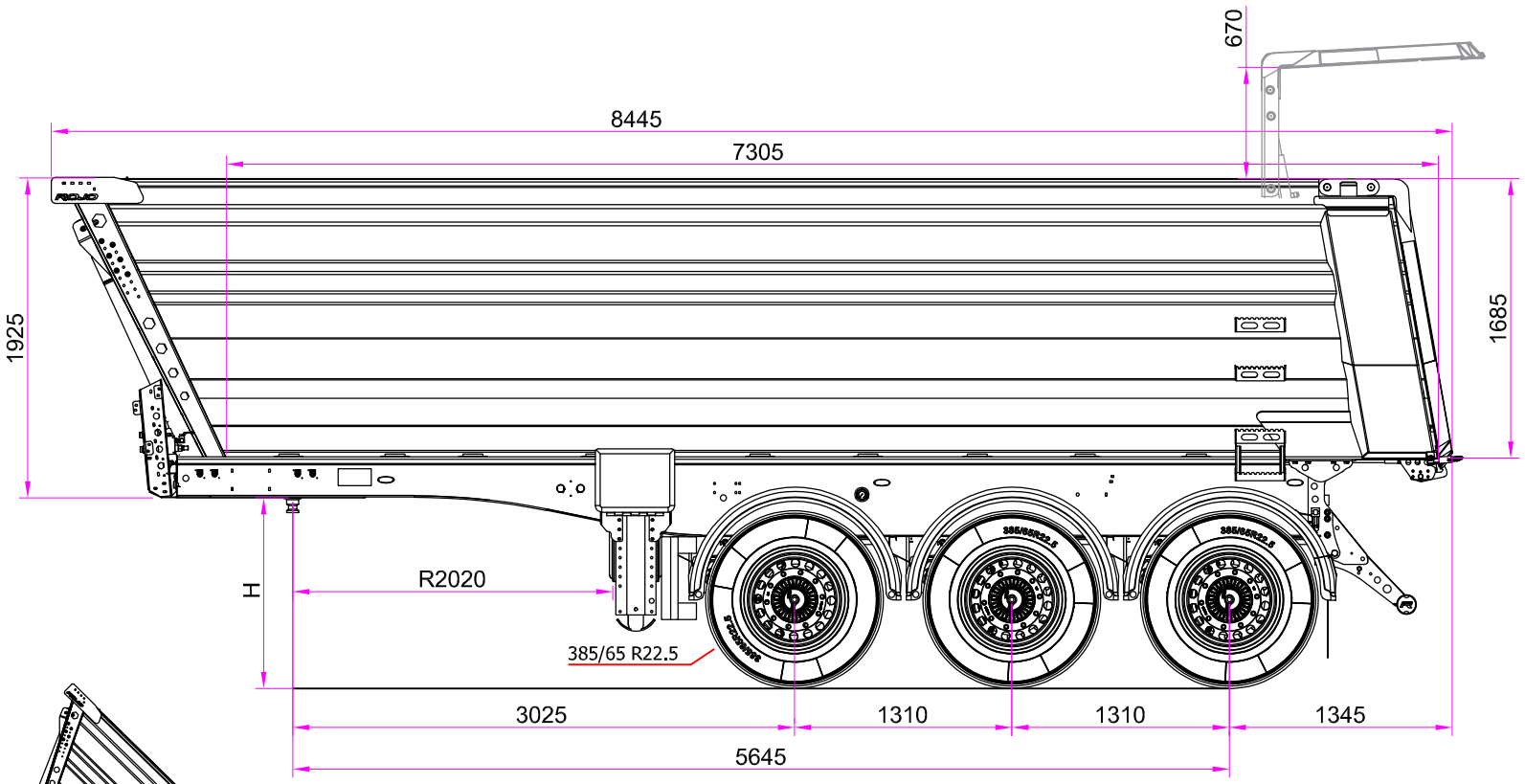

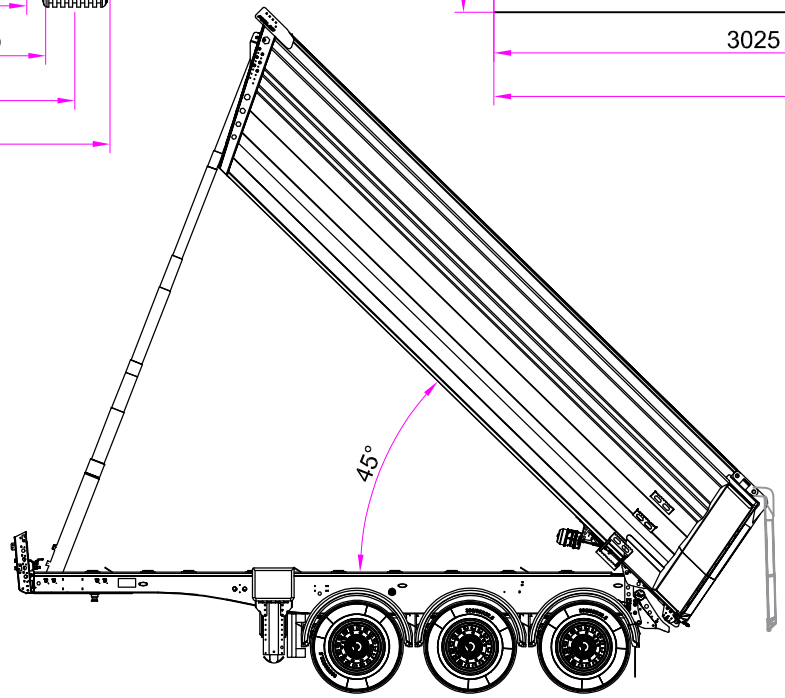

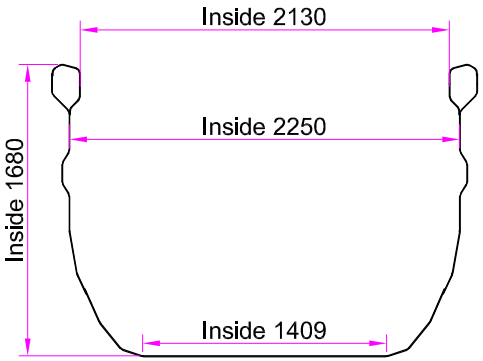

	Max. Coupling w.:	Max. Axle weight:	Max. Susp. weight:	Max. GVW:	Dead weight aprox:	Load capacity :
100 Km / h. CE homologation	12.000 Kg	9.000 Kg	27.000 Kg	39.000 Kg	4.950 Kg	30.000 Kg

Drawn	CCC	Scale		Drawing nº	COM01091
Date	16/01/2023				
Name:	**BN3 ALUHARD 500+ 27,5 m³**			ROJO	
Comments:	**2550 - R2020 - 7305 - 1685**				

This document is owned by ROJO TRAILER S.L. Reproduction or copying without permission is prohibited.