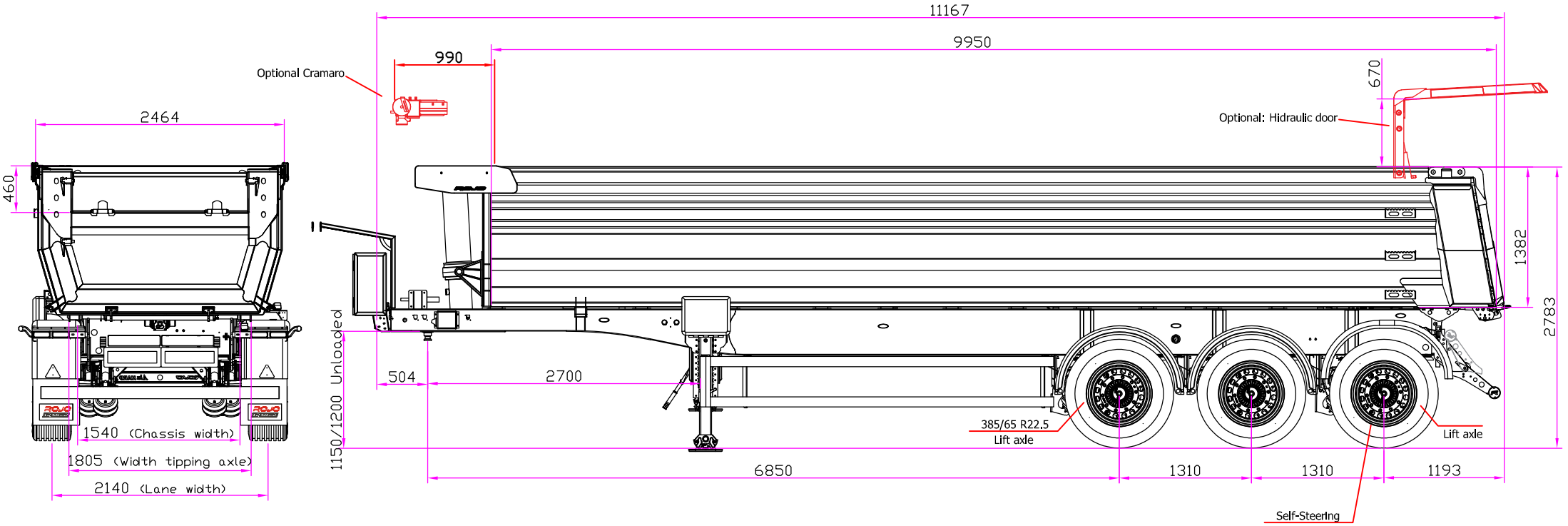

	Max. Coupling w.:	Max. Axle weight:	Max. Susp. weight:	Max. GVW:	Dead weight aprox:	Load capacity :
100 Km / h. CE homologation	18.000 Kg	9.000 Kg	27.000 Kg	45.000 Kg	6.890 Kg	32.000 Kg

Drawn	SPR	Scale		Drawing nº	COM01043_2R
Date	04/12/2024				
Name:	**ALUHARD 450- 28.9 m³**			ROJO	
Comments:	**SWEDEN MODEL**				

This document is owned by ROJO TRAILER S.L. Reproduction or copying without permission is prohibited.