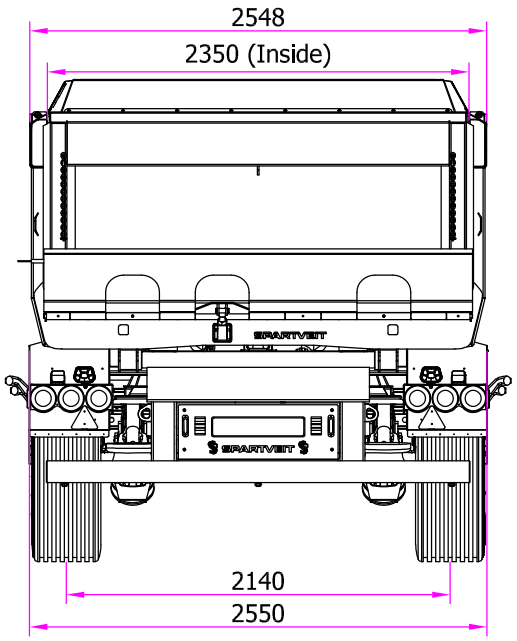

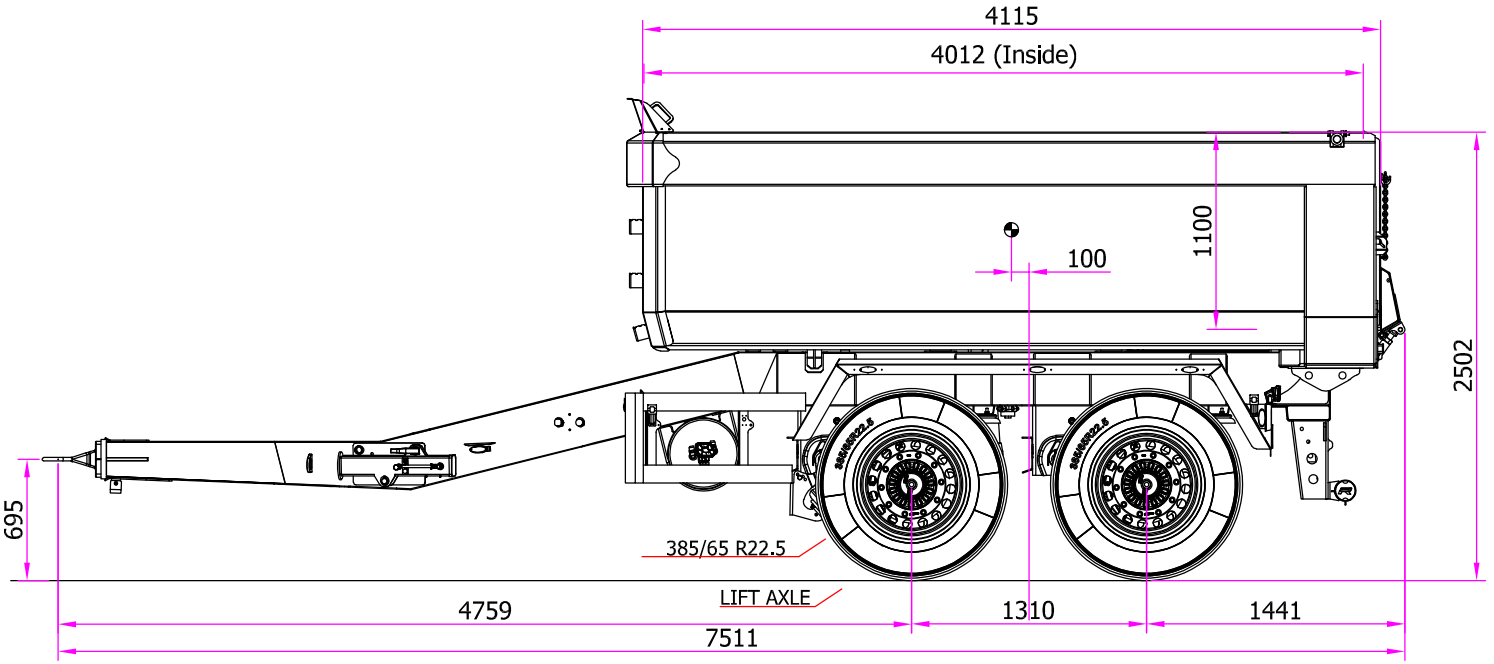

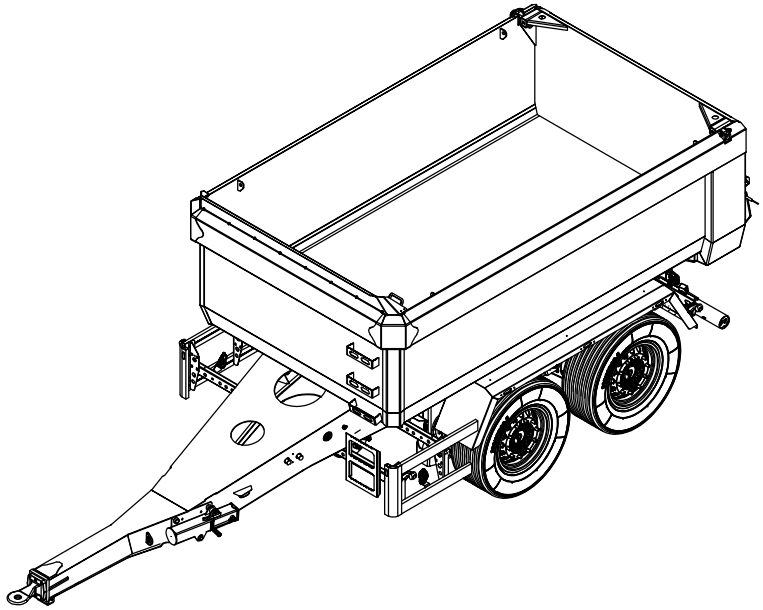

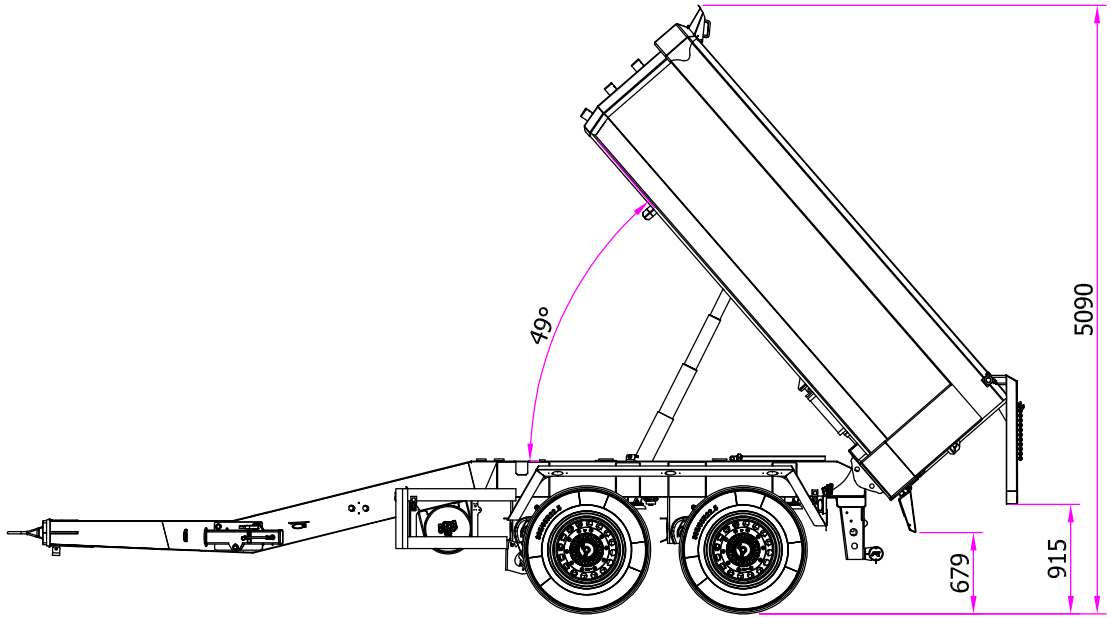

	Max. Axle weight:	Max. Susp. weight:	Dead weight aprox:	Load capacity aprox:
100 Km / h. CE homologation	9.000 Kg	18.000 Kg	4.460 Kg	13.500 Kg

Drawn	CCC	Scale		Drawing nº	COM01114R
Date	18/04/2024				
Name:	**SPARTVEIT DKJ-2 (TIPPER DRAWBAR)**				
Comments:	**2540-7535-4100- 10,3 m³ - VIA 2140**				

This document is owned by ROJO TRAILER S.L. Reproduction or copying without permission is prohibited.