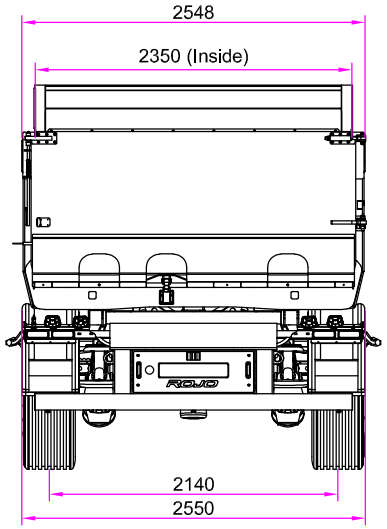

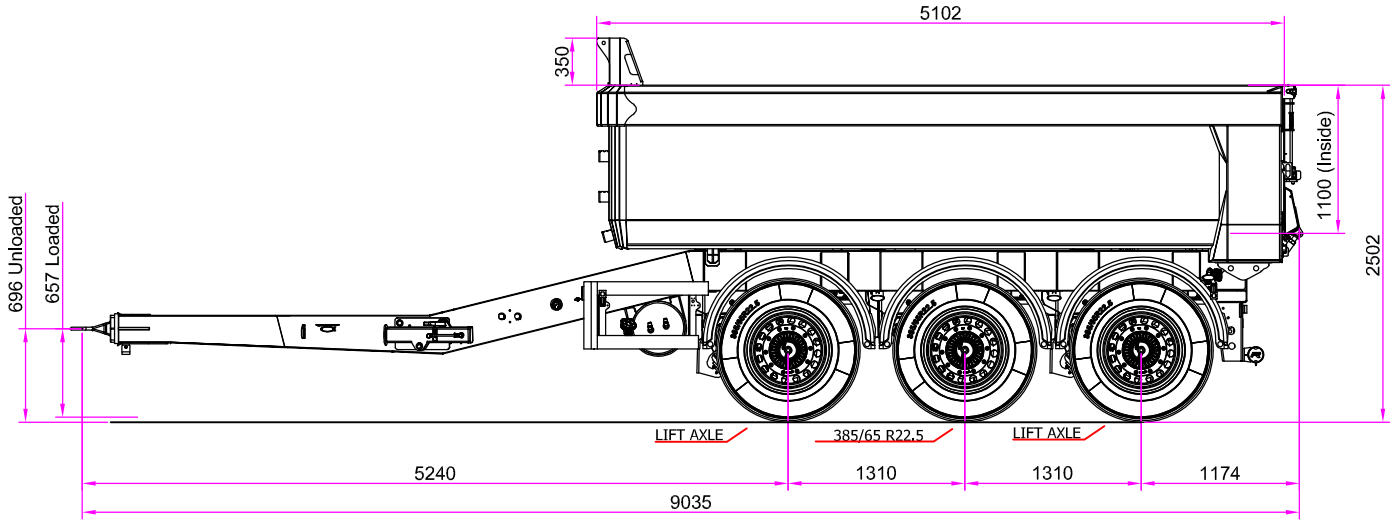

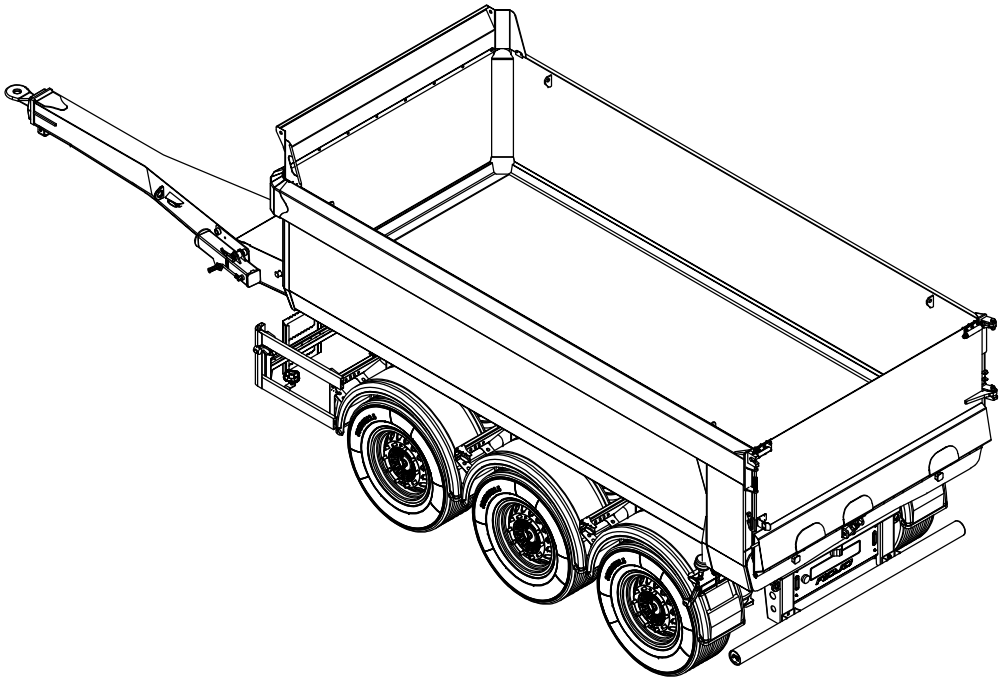

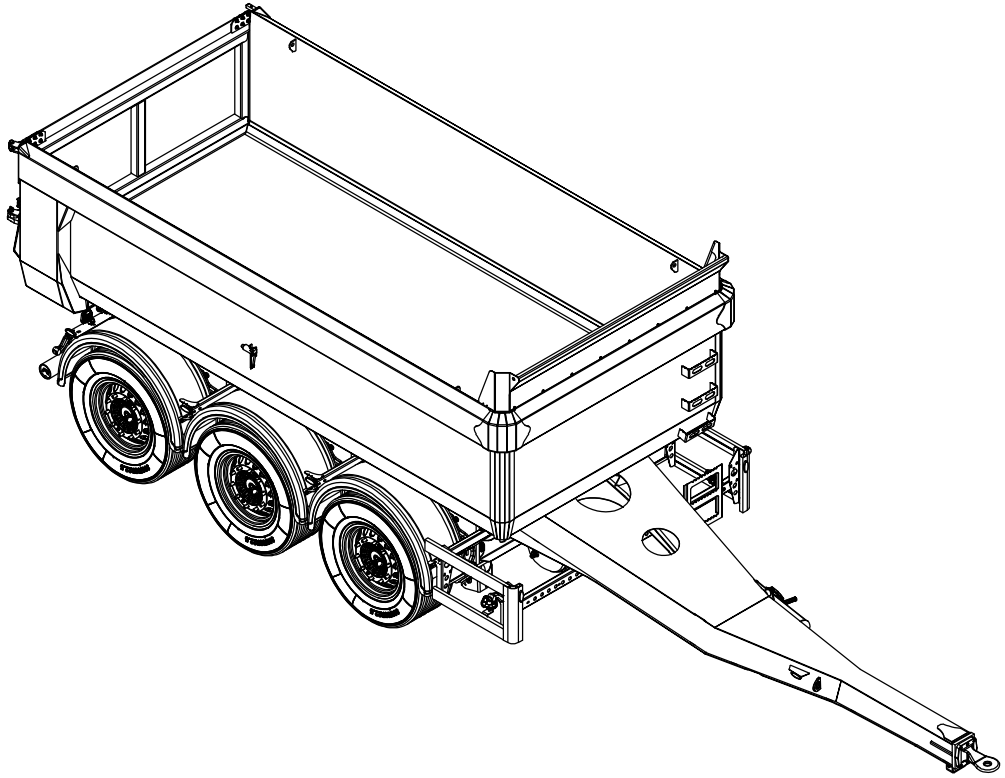

	Max. Axle weight:	Max. Susp. weight:	Dead weight aprox:	Load capacity aprox:
100 Km / h. CE homologation	9.000 Kg	27.000 Kg	5.700 Kg	21.300 Kg

Drawn	CCC	Scale		Drawing nº	COM01169R_A
Date	21/06/2024				
Name:	**RBN3 SWEDEN (TIPPER DRAWBAR)**			ROJO	
Comments:	**2540-9035-5000- 16,6 m³ - VIA 2140**				

This document is owned by ROJO TRAILER S.L. Reproduction or copying without permission is prohibited.