TRAILER VIN NUMBER

Nº	ITEMS	DESCRIPTION	UNITS
1	001B50928	SLEEVE TIPPING POINT	
2	000X50533	BELT U SUPPORT	
3	000X00267	PNEUMATIC CYLINDER	
3.1	000X00287	PNEUMATIC CYLINDER BODY	
3.2	000X00299	PNEUMATIC CYLINDER REAR SUPPORT	
3.3	000X00300	PNEUMATIC CYLINDER REAR FORK	
3.4	000X00280	PNEUMATIC CYLINDER FORK	
4	000X50540	PNEUMATIC CYLINDER SUPPORT	
5.1	002B00007	SOLID JOINT TO FORK	
5.2	DIN 934 - M30	Tuerca hexagonal	
5.3	002B51148	SLIDE MECHANISM ZINC PLATED SET	

Nº	ITEMS	DESCRIPTION	UNITS
6	002B50023	REAR FLAP	
6.1	002B00012	YELLOW REAR FLAP CAP	
6.2	002B00143	BLUE REAR FLAP CAP	
6.3	002B00142	GREEN REAR FLAP CAP	
6.4	002B51147	REAR FLAP BODY	
7	002B00014	REAR FLPA CAP	
8	000X00293	REAR FLAP SHAFT	
9	000X50566	REAR FLAP PUSHER	
10	000X00291	CYLINDER SHAFT LOCK MECHANISM	
11	000X50632	CYLINDER HEAD SUPPORT	
12	002B00011	REAR FLAP PUSHER SHAFT	

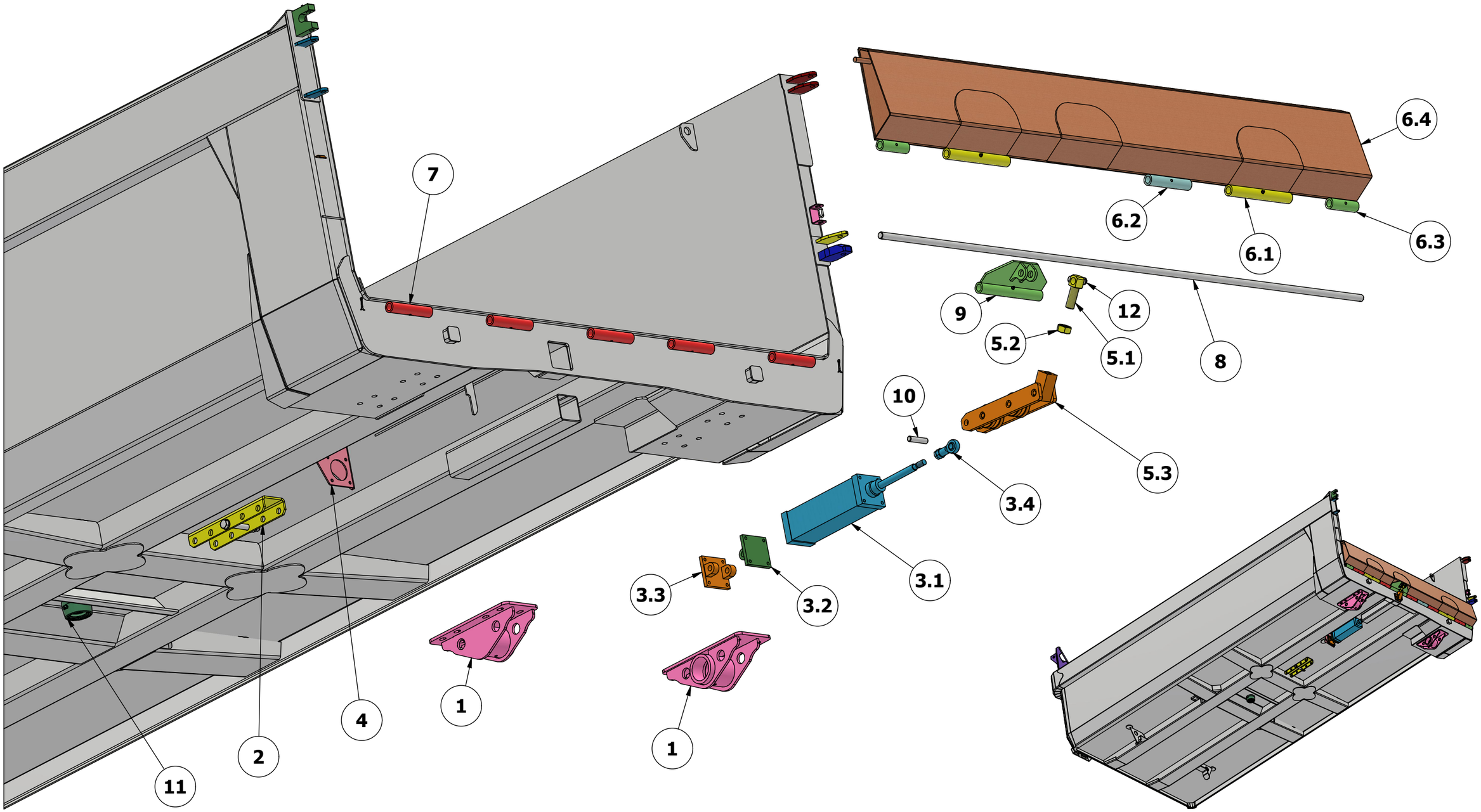

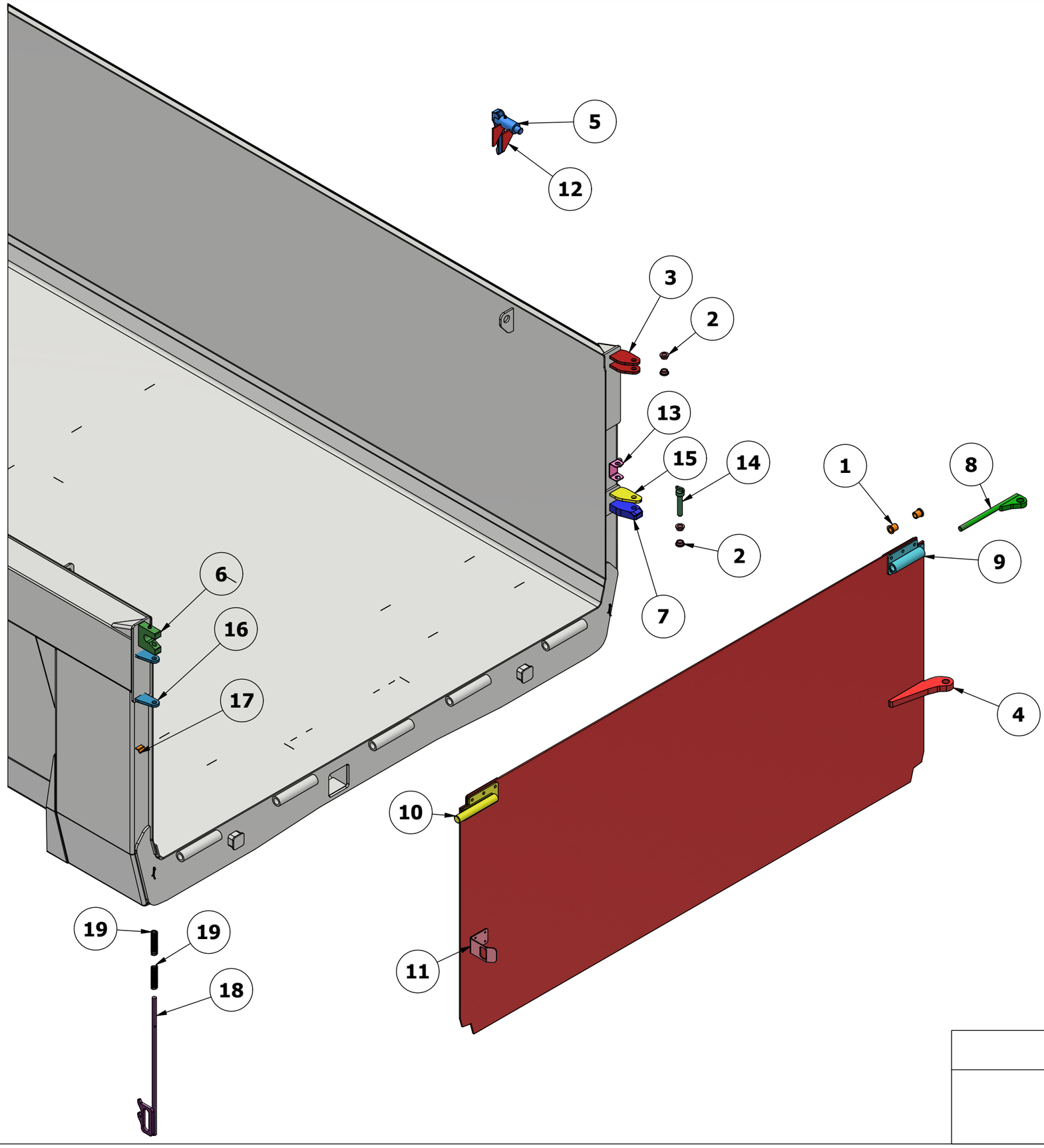

Nº	ITEMS	DESCRIPTION	UNITS
1	000X00282	BONZE BUSHING	
2	002B00209	BONZE BUSHING	
3	002B51831	UPPER RIGHT HINGE	
4	002B51859	ALUMINIUM HINGE	
5	SEMI0251	SIDE CLOSURE	
6	002B51830	UPPER LEFT HINGE	
7	002B51828	LOWER HINGE	
8	002B51977	HINGE BOLT	
9	002B51975	SCREW-ON SWIVEL BUSHING	
10	002B51976	SCREW-ON SWIVEL BOLT	
11	002B51836	SIDE CLOSURE PLATE	
12	002B51826	SIDE CLOSURE BASE	
13	002B51864	U BOLT	
14	002B51979	BOLT	
15	002B51829	LOWER HINGE	
16	002B51813	LOCKING HINGE	
17	002B51851	LOCKING STOP	
18	002B51978	HINGE LOCK	
19	002B00208	SPRING	

TRAILER VIN NUMBER

TRAILER VIN NUMBER

Nº	ITEMS	DESCRIPTION	UNITS
1	000X50542	LONG PLATEN FRONT SHADOW FASTENER	
2	002B50854	SHORT PLATEN FRONT SHADOW FASTENER	
3	002B51974	FRONT SHADOW WITH HEAD GRIP	

