LOAD DRAWINGS

1.- Load center “LC” position vs extension

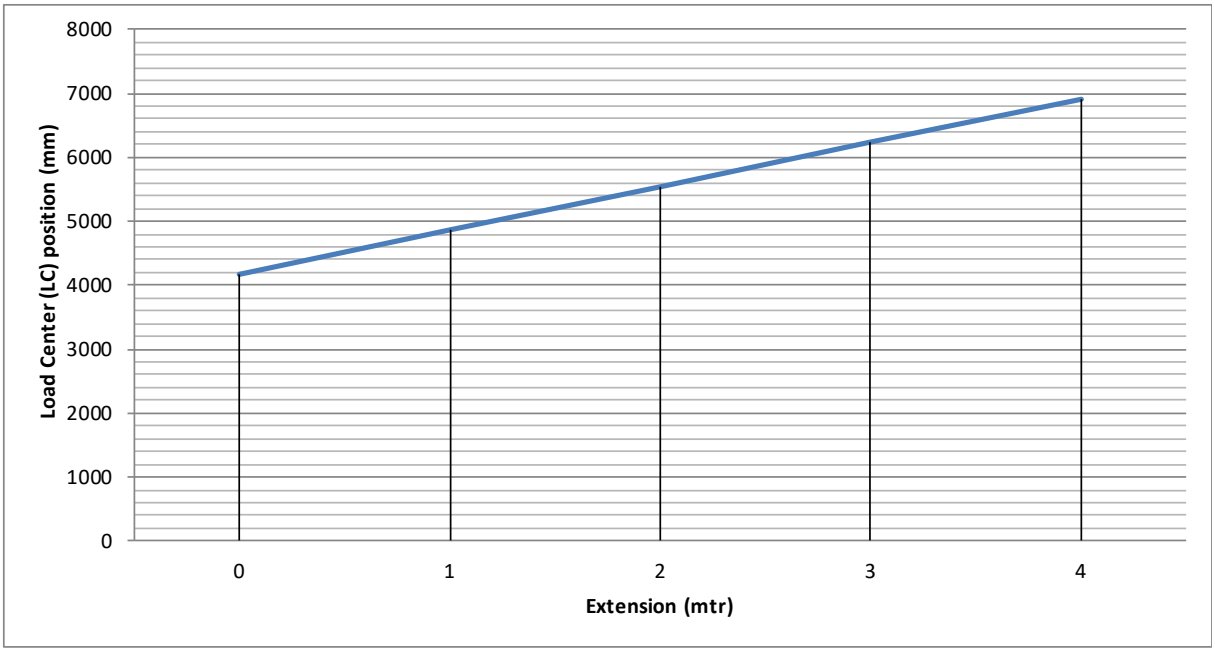

LC position = 4.170 + (690 x extension meter)

Moves forward 310 mm x extension meter

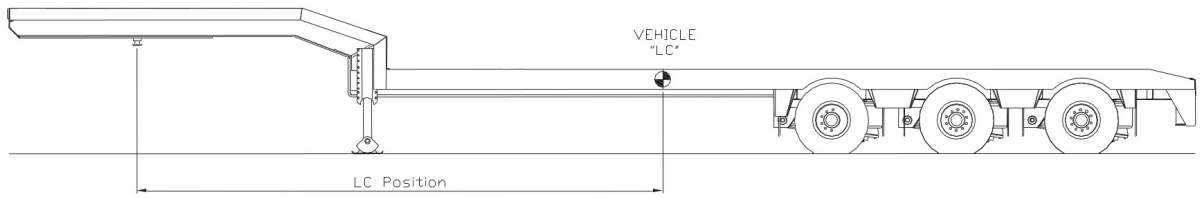

2.- Maximum load vs Load CDG offset

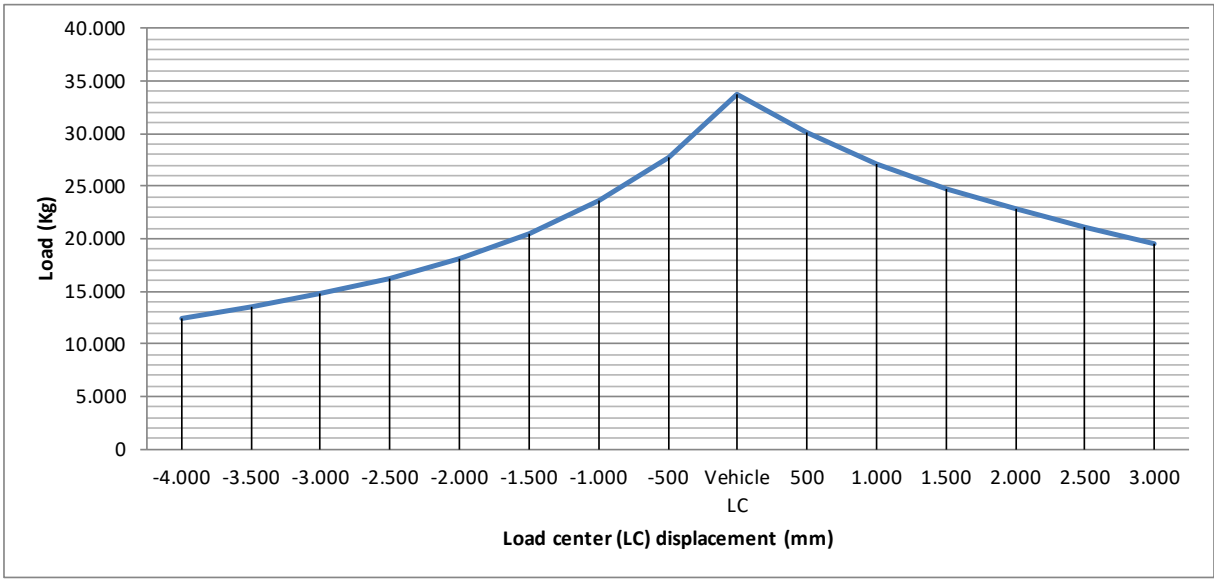

3.- Maximum Load vs vehicle leng

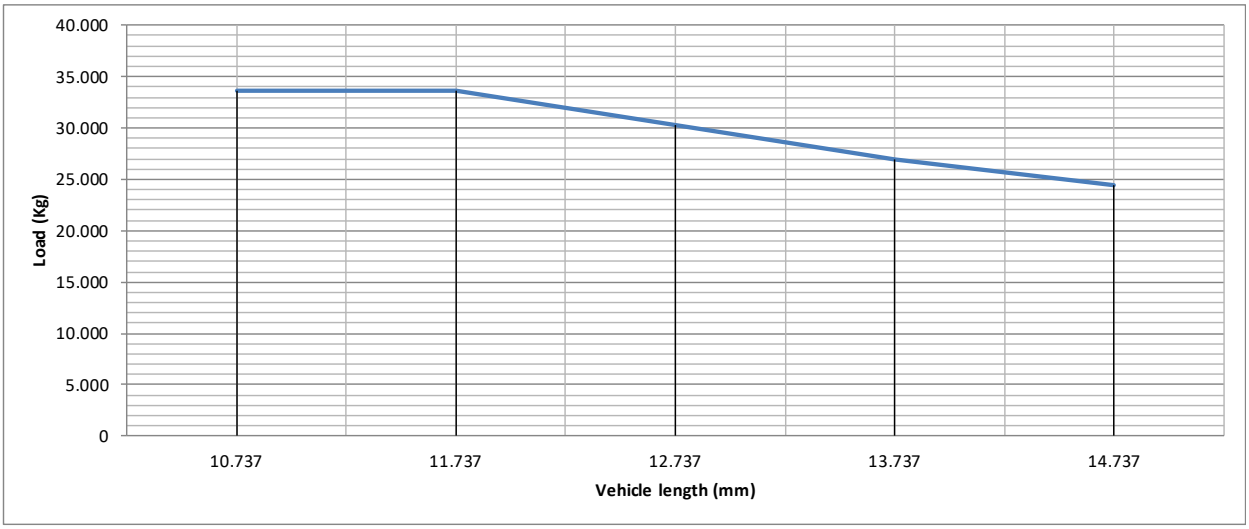

4.- Load support centre position



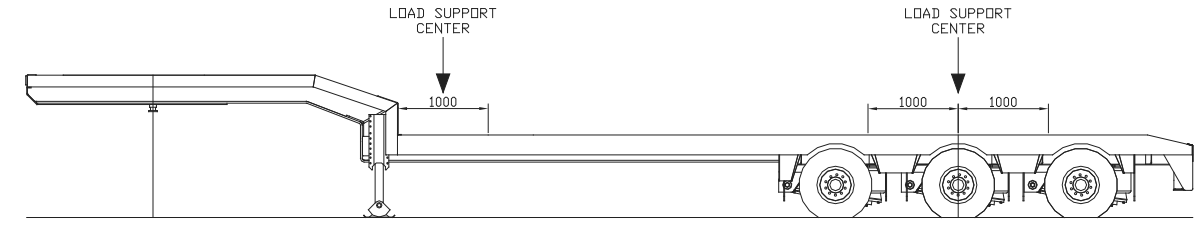

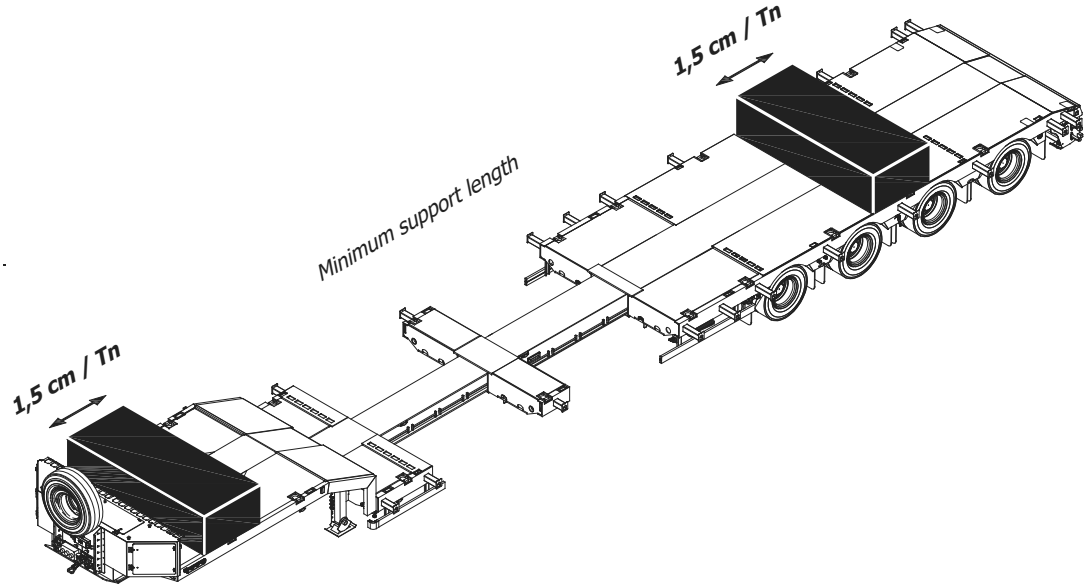
1,5 cm / Tn
Minimum support length
1,5 cm / Tn

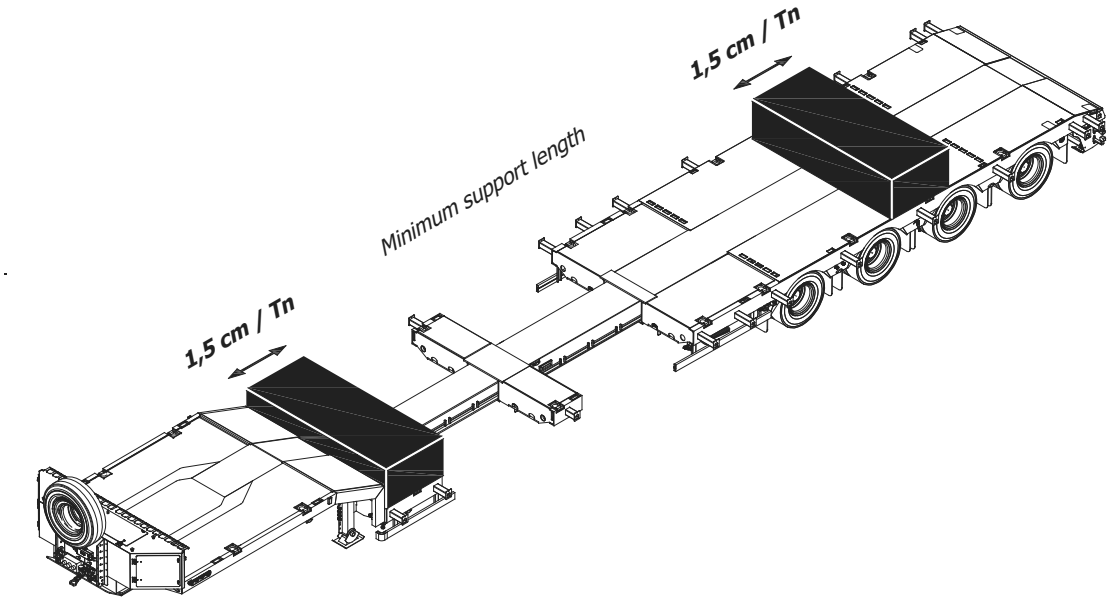
1,5 cm / Tn
Minimum support length
1,5 cm / Tn

5.- Minimum support length

