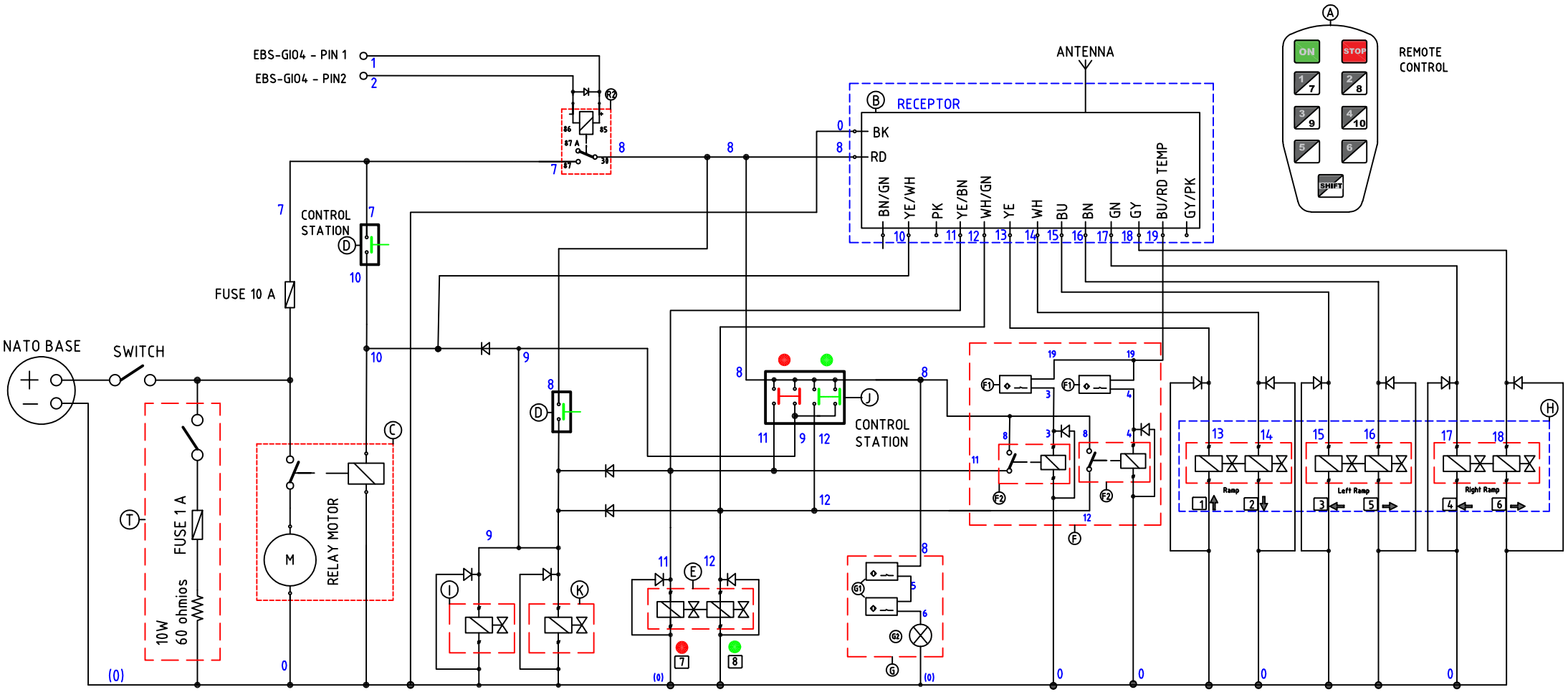

	ELEMENTS
A	TX TELEMAX TXIN12TW19
B	RECEIVER TELEMAX IN12TW19
C	POWER UNIT AUTOELECTRIQUE
D	PUSH BUTTON
E	DUPLOMATIC
F	REAR ALIGNMENT
G	FRONT ALIGNMENT
R2	RECEIVER RELAY
H	DISTRIBUIDOR
J	CONTROL STATION SCHNEIDER
I	ELECTROVALVE SAE-08 (HIDRAULIC BLOCK)
K	ELECTROVALVE (HIDRAULIC BLOCK)
T	RESISTANCE (OPTIONAL)

Revisión		FORMATO HOJA		MATERIAL	
Fecha	DIBUJADO	DSA		PESO	
24/03/2025	Nº PIEZAS POR VEHICULO:			TRATAMIENTO	
Escala:	Designación:				
	Observaciones:				

REFERENCIA	ELE00031_6
TOLERANCIA SEGUN ISO 2768-v	

ROJO

This document is owned by ROJO TRAILER S.L. Reproduction or copying without permission is prohibited.