

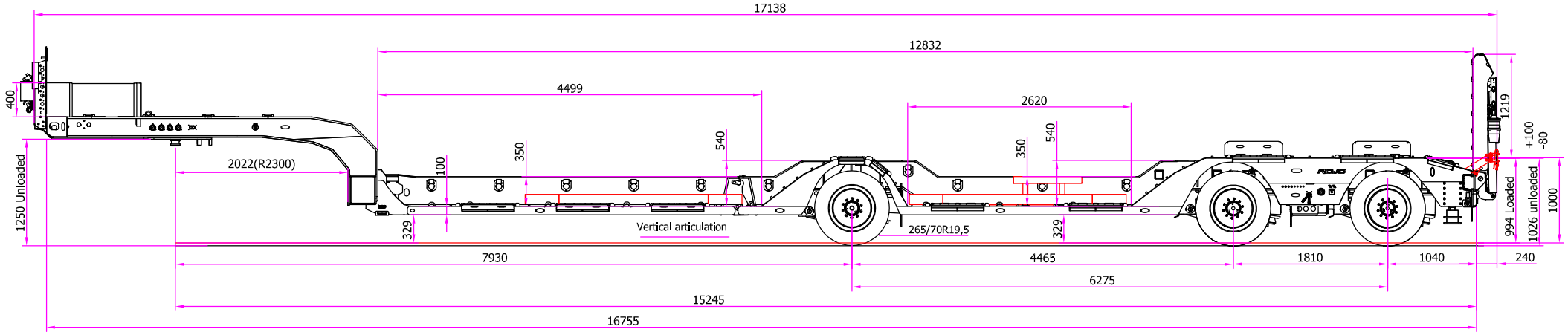

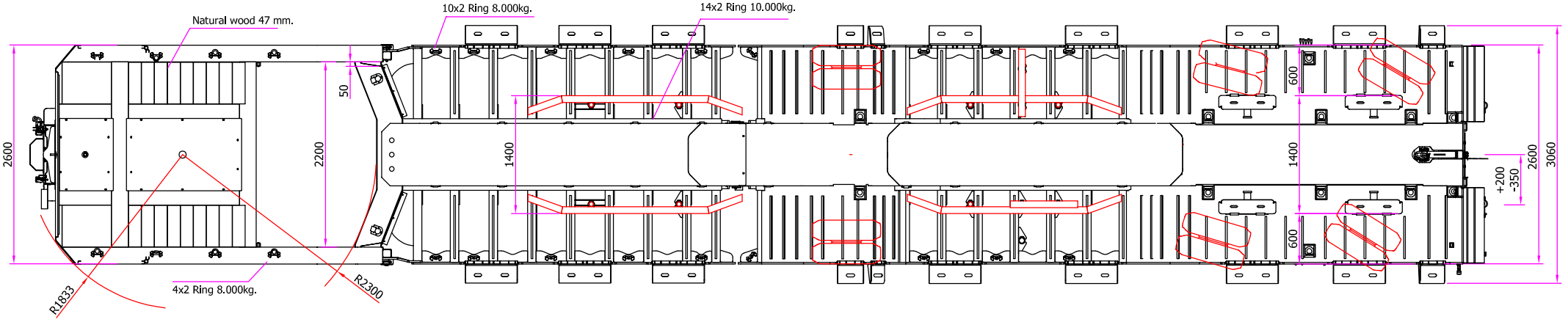

	Max. Coupling w.:	Max. Axle weight:	Max. Susp. weight:	Max. GVW:	Dead weight aprox:	Load capacity aprox:
100 Km / h. CE homologation	20.000 Kg	10.300 Kg	30.900 Kg	50.900 Kg	14.560 Kg	36.340 Kg

Drawn	SPR	Scale		Drawing nº	COM00936_4R
Date	21/04/2022				
Name: **GDN 1+D2 - DL EE - C VL 2600 - 12830**					
Comments: **FOREST BIG MODEL, ref. SYD**					

This document is owned by ROJO TRAILER S.L. Reproduction or copying without permission is prohibited.