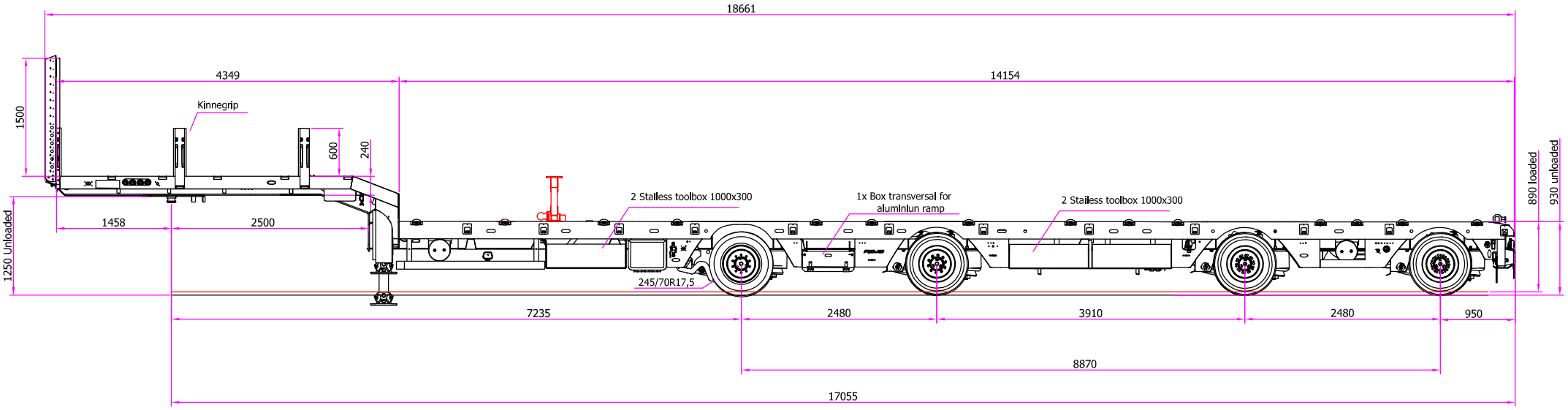

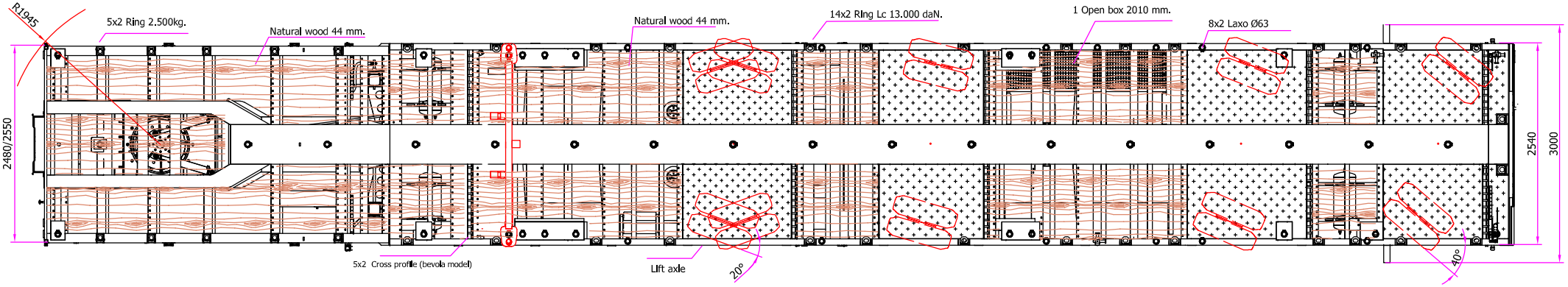

	Max. Coupling w.:	Max. Axle weight:	Max. Susp. weight:	Max. GVW:	Dead weight aprox:	Load capacity aprox:
100 Km / h. CE homologation	20.000 Kg	10.300 Kg	41.200 Kg	61.200 Kg	14.120 Kg	47.100 Kg
80 Km / h. Special transport	20.000 Kg	12.000 Kg *	48.000 Kg	68.000 Kg	14.120 Kg	53.900 Kg

* SAF axle 11.600 Kg

Drawn	SPR	Scale		Drawing nº	COM01015_8RA
Date	21/01/2025				
Name:	**GPND4 2550 - 14155 - VT950**				
Comments:					

This document is owned by ROJO TRAILER S.L. Reproduction or copying without permission is prohibited.