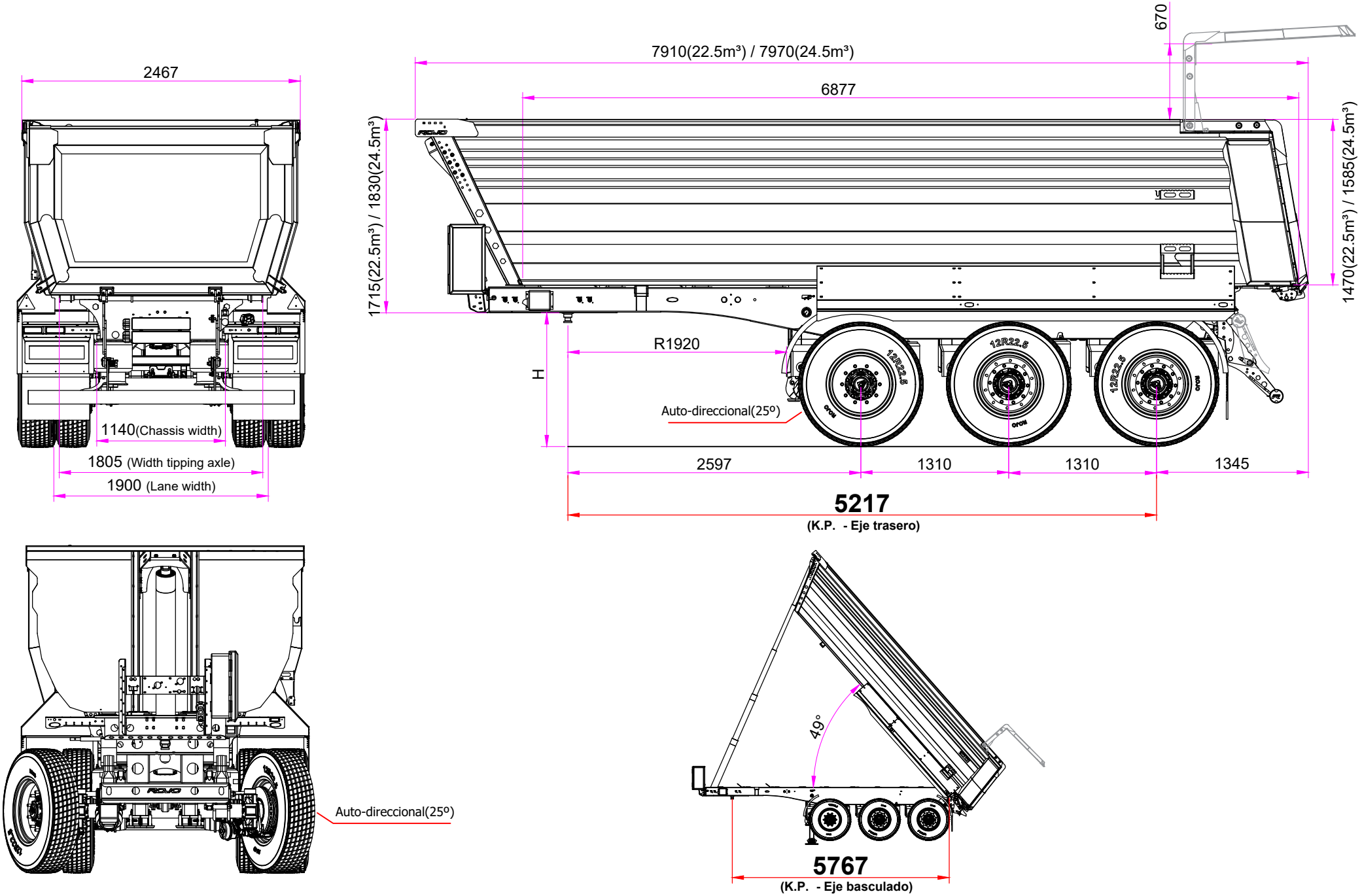

	Max. Coupling w.:	Max. Axle weight:	Max. Susp. weight:	Max. GVW:	Dead weight aprox: 22,5 m³	Dead weight aprox: 24,5 m³	Load capacity
100 Km / h. CE homologation	12.000 Kg	7.000/10.000 Kg	27.000 Kg	39.000 Kg	6.400 Kg	6.520 Kg	32.000 Kg

Date	04/02/2026	Scale		Drawing nº	COM01237
Name:	**BN 2+1 XtremHARD 500 (2026)**				
Comments:	**2550 - R1920 - 6870**				

This document is owned by ROJO TRAILER S.L. Reproduction or copying without permission is prohibited.