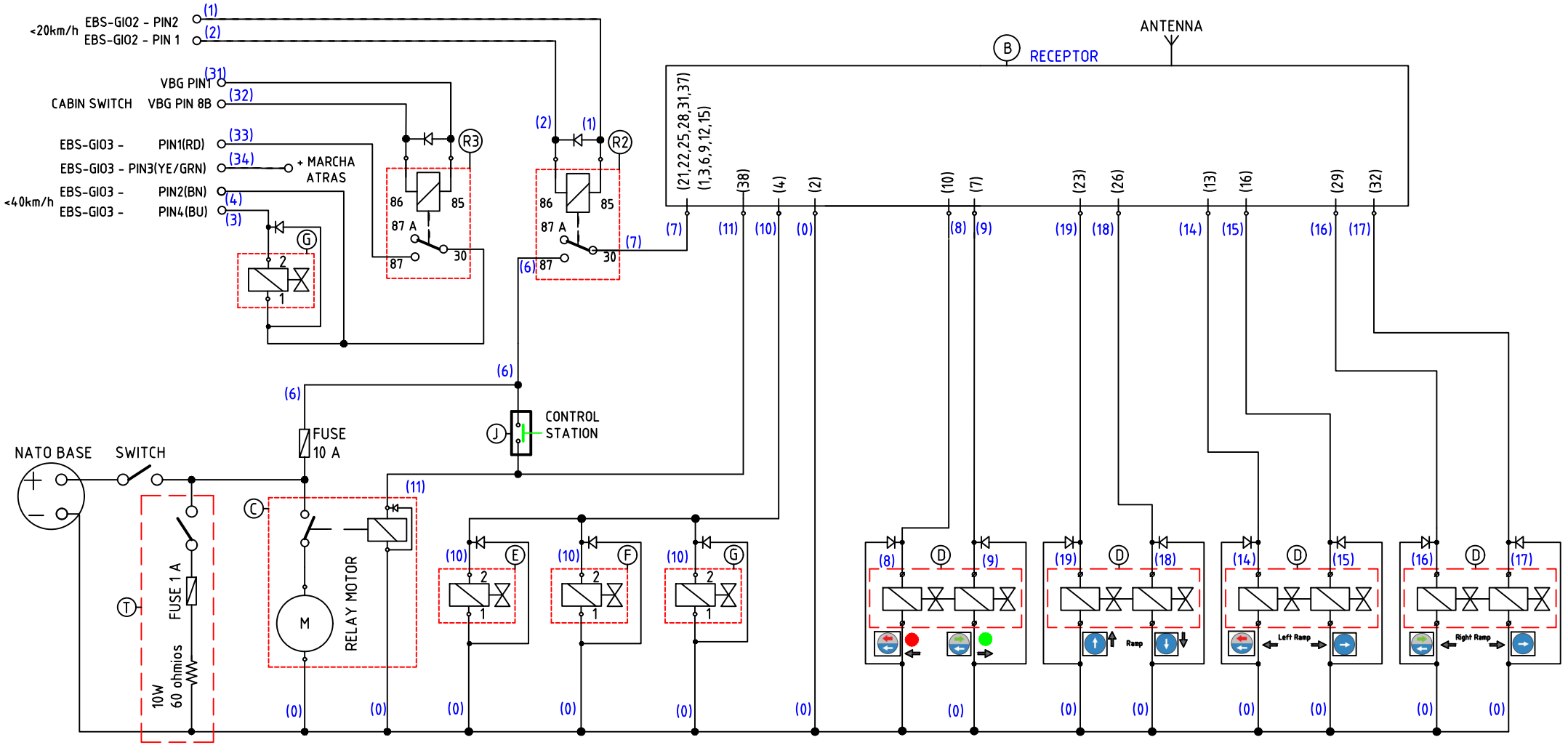

	FUNCION
A	TELE RADIO
B	RECEIVER TELERADIO
C	POWER UNIT ISKRA AUTOELECTRIQUE
D	FORCED STEERING RIGHT-LEFT CONTROL
E	FORCED STEERING HYDRAULIC POWER CONTROL
F	SELF-STEERING AXLE COMPENSATION CONTROL (VEB-3 NO)
G	SELF-STEERING AXLE BLOCKING CONTROL 4º AXLE (VEB-2 NC)
K	RAMPS, UP & DOWN
L	RAMPS, RIGHT -LEFT
R1	SELF-STEERING AXLE BLOCKING RELAY
R2	RECEIVER RELAY
T	RESISTANCE (OPTIONAL)

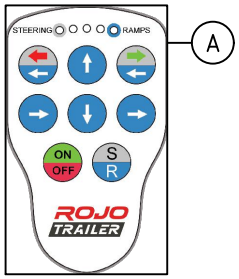

Revisión		FORMATO HOJA		MATERIAL	
Fecha	DIBUJADO	DSA		PESO	
28-01-26	Nº PIEZAS POR VEHICULO:			TRATAMIENTO	
Escala:	Designación:	SELF -STEERING HYDR. FORCE + RAMPS (WABCO)			
	Observaciones:				

REFERENCIA	ELE0036_4
TOLERANCIA SEGUN ISO 2768-v	

ROJO

This document is owned by ROJO TRAILER S.L. Reproduction or copying without permission is prohibited.