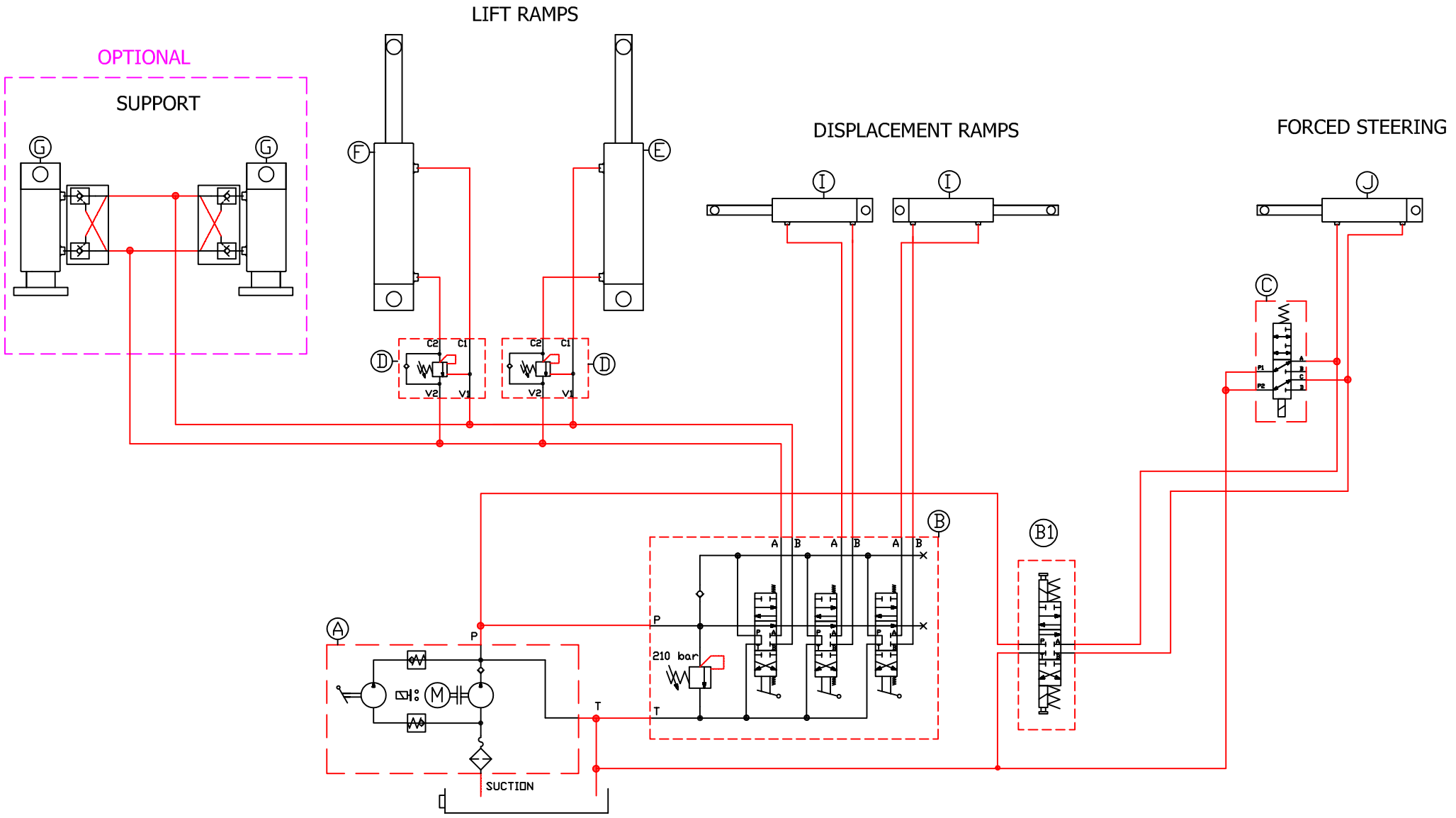

	FUNCION	REFERENCIA
A	POWER UNIT ISKRA AUTOELECTRIQUE	IM0030 AMJ4662 24V 2.2 KW
B	DISTRIBUIDOR	SALAMI ref. VDM6DDDU4G
B1	FORCED STEERING RIGHT-LEFT CONTROL	ELECTROVALVE 4/3 NG06 24v
C	FORCED STEERING HYDRAULIC CONTROL	ROQUET 927800/24
D	OVER-CENTER	ON ref. VBCD 3/8' SE-A
E	CYLINDER LIFT RAMPS RIGHT	DE0500800550A070A - RIGHT
F	CYLINDER LIFT RAMPS LEFT	DE0500800550A070A - LEFT
G	CYLINDER SUPPORT	DE081000240I12
I	CYLINDER DISPLACEMENT RAMPS	DE0300500400H07
J	CYLINDER FORCED STEERING	DE0300700300D04

Revisión		FORMATO HOJA		MATERIAL	
Fecha	DIBUJADO	DSA		PESO	
17-02-21	Nº PIEZAS POR VEHICULO:			TRATAMIENTO	
Escala:	Designación: MECANIC DOBLE RAMP + HIDRAULIC SUPPORT+ SELF -STEERING HYDR. FORCE				
	Observaciones:				

REFERENCIA HID00046

TOLERANCIA SEGUN ISO 2768-v

ROJO

This document is owned by ROJO TRAILER S.L. Reproduction or copying without permission is prohibited.