ROJO TRAILER

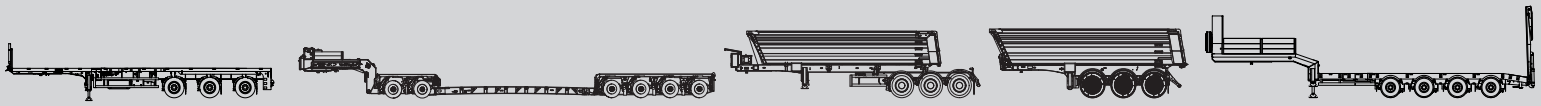

DRAWBAR TIPPER



USER GUIDE

CONTENTS

1- GENERAL NOTICE 3

1.1 -Manufacturer's responsibility 3
1.2 -Regulations 3
1.3-Keep the certificate and user's guide 3
1.4 -Vehicle identification: 3

2- DESCRIPTION AND LIMITS 4

2.1 -Vehicle description: 4
2.2 -Usage: 4
2.3 -Incorrect use: 4

3- SAFETY AND GENERAL WARNINGS 5

4- ATTACHMENT WITH THE TRACTOR UNIT: 10

5-LOADING AND UNLOADING 11

5.1- Loading process 11
5.2- Door opening and closing 11

6- TILTING (Unloading): 13

6.1- Box tilting: 13

7- DRIVING: 14

8- MAINTENANCE/ REPAIR: 15

8.1- General warnings 15
8.2- Maintenance periods. 16
8.3- Particularities of the maintenance operations 17
8.4- ANUAL Maintenance plan for SAF axles 19

9. ALUHARD 500+ USED AS A TOWING VEHICLE (EUROMODULAR) 26

9.1. Procedure for coupling the trailer. 26
9.2 Procedure for uncoupling the trailer 29
9.3- Select tipping option 32

1- GENERAL NOTICE

This symbol will always accompany the instructions to prevent any material damages to the equipment, personal injuries or danger situations.

1.1 -Manufacturer's responsibility

It is against the operating rules described for the tippers and accessories, not considering the notes and warnings appearing in this guide, the full or partial inappropriate use of the tipper, using non-authorized spare parts, and using the tipper by non-qualified personnel. Rojo Trailer S,L. refuses any responsibility due to material or personal damages

1.2 -Regulations

This guide has been written according with the instructions described in the annex "1" of the directive 2006/42/CE, point 1.7.4.

1.3-Keep the certificate and user's guide

This guide is a part of the machine, keep it for future references.

1.4 -Vehicle identification:

In order to ask for spare parts and to request some information and support, each vehicle will be provided with a plate where it is included, among other data, the serial number of the vehicle.

This plate shall be placed on the front part of the frame right beam of the chassis or on other similar structure of the machine.
Observe the following picture.

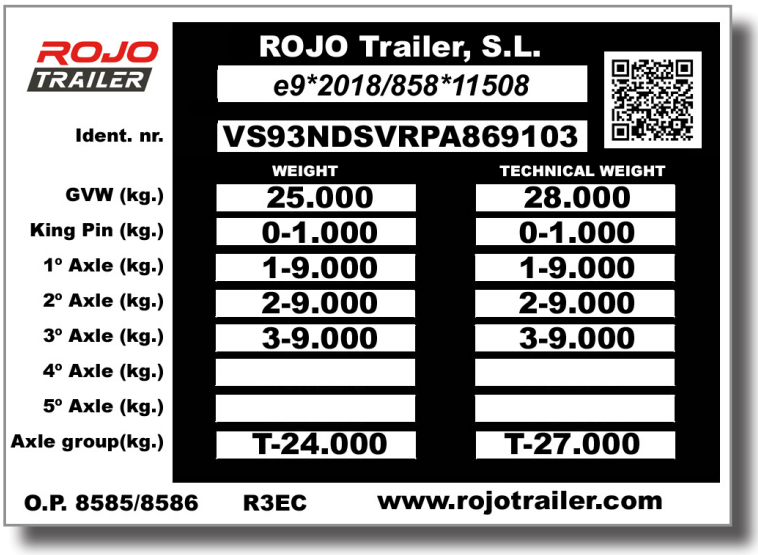

2- DESCRIPTION AND LIMITS

2.1 -Vehicle description:

ROJO tippers are designed for goods transport, loading and unloading by a tipping body. The operation of these vehicles is the same, without any substantial change but of those construction elements of the trailer and measures or the quantity of axles (all these elements will not affect the performance and efficiency of the tipper).

2.2 -Usage:

Intended use of the machines: transporting and unloading by the tipping system of the trailer, for all type of bulk goods.

Transport: Industrial trailers pulled by a tractor unit. The maximum speed for this kind of mixed vehicles (tractor + trailer) is: 100 km/h.

Tilting: This equipment has been designed to be used by only one operator. It will always be operated from the driver's position in the tractor unit and the vehicle danger area will never be crossed (rear part).
Do not tilt in front in the presence of people close to the working area or in contact with any point of the trailer.

2.3 -Incorrect use:

Any use non-described in this guide will be considered inappropriate. It will not be used to load any different materials of the ones here described, as well as any machines, structures, people or animals.
It is not allowed loading on the trailer more than the maximum permissible laden weight according with the design and homologated for this model.

3- SAFETY AND GENERAL WARNINGS

-The inappropriate use of the tipper, as well as not respecting the security rules can cause serious consequences for the staff and/or material.

BEFORE ITS USE:

-Read carefully the guide
-Get informed about the sector security rules in force
-Do not modify the cylinder pressure valve
-Before tilting, make sure that there aren't any obstacles, electric cables, ceilings etc. If it can be any contact with a power line, low the vehicle immediately, avoiding any contact between the floor and the vehicle.
-Make sure that there is not anyone on the vehicle's way.
-Before driving, make sure that the breaks, connections and lighting are operating properly
-Do not transport people in the semi-trailer

DURING OPERATION:

The tipper was designed to be used by only one operator. The operator position will always be into the truck cab while it is tilted, or on the left side of the tipper for other operations.
When it is operated on a public road, the vehicle must be duly signaled, and it is compulsory wearing reflecting clothes.

Do not overload the vehicle

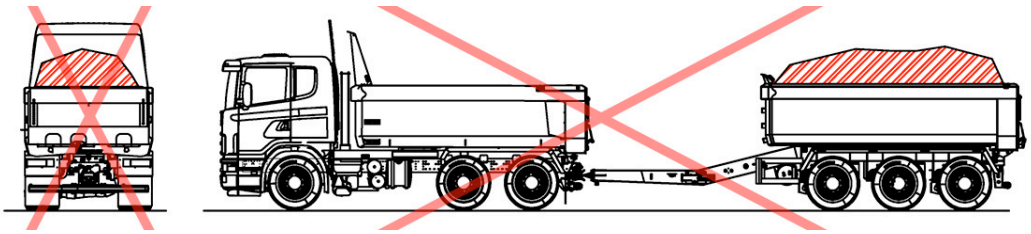

Divide the loading uniformly to avoid overloadings.

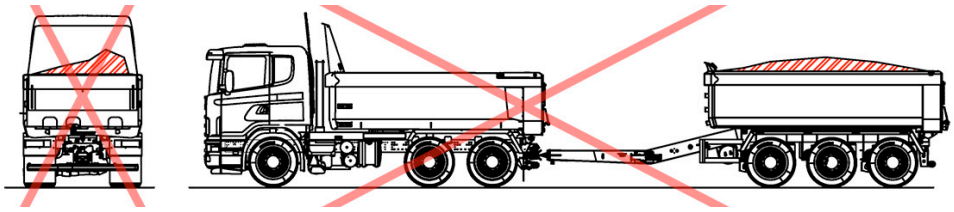

Do not tilt on irregular or soft surfaces.

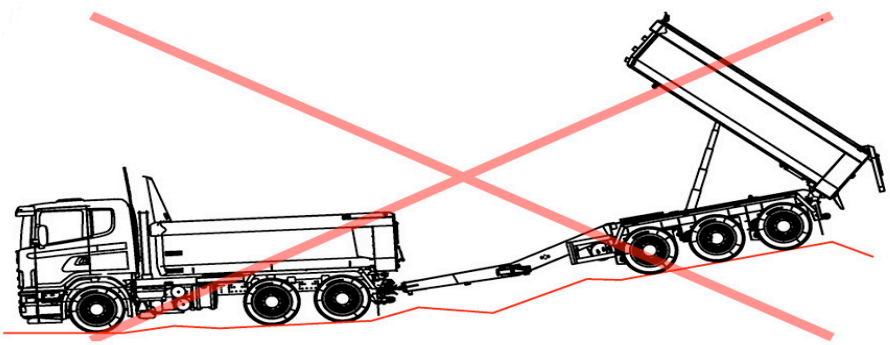

Do not tilt with the vehicle laterally inclined

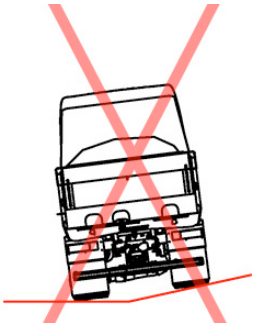

Do not stand in the operation area

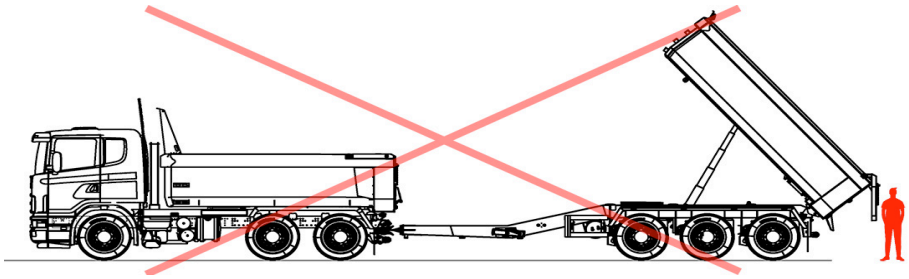

Do not move the vehicle while tilting

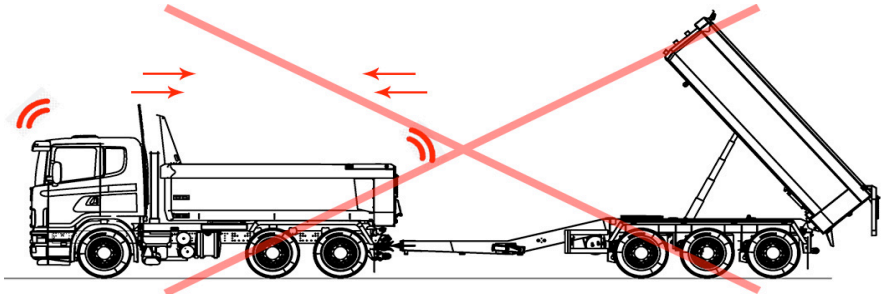

Do not drive with the box lifted

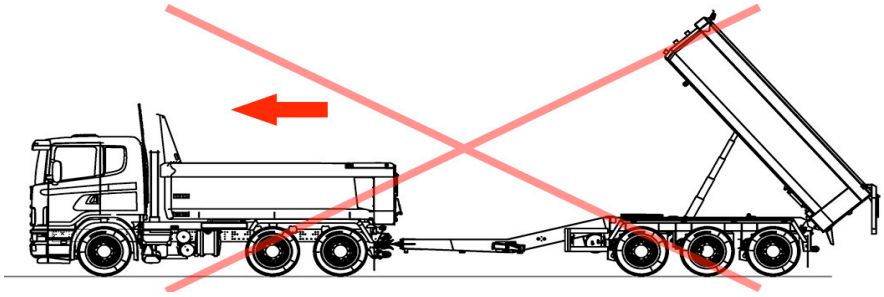

Do not tilt with any axle lifted

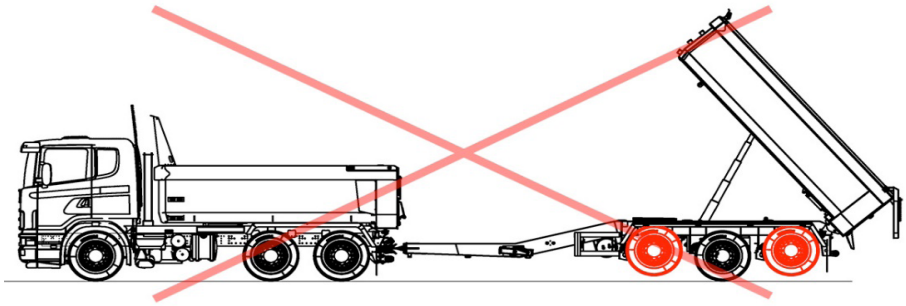

Stop the unloading, if the charge doesn't begin to be unloaded on halfway (20º or 25º).

Mantenimiento y controles:



Before doing any operation, read the instructions and advices of this manual.

-Wear the individual security equipment.
-Careful with the liquids under pressure, protect hands, eyes and the rest of the body.
-To avoid any risks, low the hydraulic system and other systems pressure
-In order to do any welding in the tipper, disconnect the electronic equipment and do not put any mass on the hydraulic elements. Put the mass as close as possible to the welding area. Do not do the welding close to the wheels; if it needs to be done, cover them or disassemble them.
-Grease periodically the tipper joints for its proper operation.
-DO NOT WORK UNDER THE TIPPER WITHOUT ANY SECURITY SUPPORT IN CASE THE BOX WILL GO DOWN AND THE HYDRAULIC SYSTEM BLOCKED.
-For the maintenance operations, respect the proceeding for labour health and safety risks.
-Respect the advices for the environment preservation.



Wear individual protection clothes



Do not use loose clothes, use tight working clothes.



Safety shoes



When handling, disassembling, doing the maintenance, etc. Use working gloves



Use face masks if there is there is some dust.



If the noise is very loud (the noise in some workshops is louder than 80 dB (A)), wear a hearing protection equipment and close the doors and windows of the cabin to reduce the noise



Safety Equipment

It is recommended having a first aid box and an emergency phone list in the cabin. Respect the fire extinguishers usage rules. If there are some flammable materials, a fire extinguisher should be in the cabin.

4- ATTACHMENT WITH THE TRACTOR UNIT:

Before starting, make sure that there aren't any people or obstacles close

-Make sure that the trailer is braked (pull the red pusher button).
-Adjust height of the drawbar eye for the correct attached with the drawbar.
-Approximate the tractor unit looking for a correct alignment with the trailer

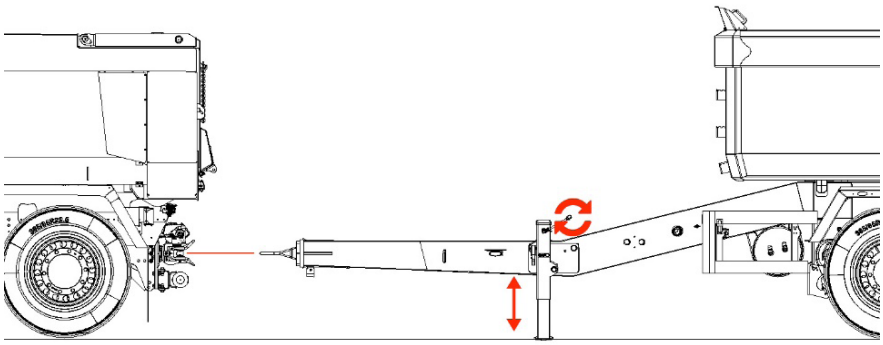

Plug every connection between the tractor unit and the platform; hydraulic, electric, and pneumatic connections (DUOMATIC)

5-LOADING AND UNLOADING

Loading and unloading on a levelled surface; make sure that the brakes are on before loading/unloading. Do not overload the tipper or the tractor unit; observe the technical data to know the capacities of each one.



Before loading, make sure that the doors are closed ant the accessories are tightened

5.1- Loading process

Before loading, make sure that full air pressure arrives to the trailer and that the trailer suspension pressure levels are correct.



Loading the trailer with the suspension depressurized can structurally damage the chassis. .

Make sure that the tilt control of the truck is on a neutral or lowering position. So, the box will be supported directly on the chassis but not on the cylinder.
It is recommended making the unloading with the driver present and the engine on.
Follow the loader instructions, use rear-view mirror and maintain the visual contact to move the vehicle.
When the loading has been done, make sure that there aren't any remains which can fall on the road and can cause an accident to a third party.

5.2- Door opening and closing

Open the rear flap before tilting. For it, the trailer must receive an electric signal for pin12 of the VBG.
Check visually the sign to make sure that the rear flap is open
The door is an automatic oscillating model



Stop the unloading process if the door is in contact with the merchandise unloaded.

6- TILTING (Unloading):

PROCEED TO DO THE TILTING ONLY IF THE FOLLOWING CONDITIONS ARE FULFILLED:

- All the security conditions of the pages 3, 4 and 5 are met.
- Every connection in the tractor unit and in the trailer is well done. Make sure that both hydraulic terminals are well connected and the oil flows properly.
- The group is on a stable ground, flat, leveled and that the axles are aligned.
- ALL AXLES ARE UNLIFTED
- There is no one in the unloading area.
- There are not lateral winds.
- There is not any contact risk with high-tension wires or other objects

The hydraulic equipment installed in the tractor unit must send a maximum pressure of 150 bars to the trailer

6.1- Box tilting:

- Follow the truck-tractor manufacturer's instructions to activate the hydraulic system.
- Once the box has reached the maximum inclination (49º approx), put the hydraulic system in neutral or lowering position. Never leave in the elevation position, as it can cause damage to the cylinder or safety valves..

Do not accelerate the engine of the vehicle while the unloading is getting done, the revolutions range needs to be close to the idle speed.

7- DRIVING:

- Do not drive with the tipper up, under tipping hazard, collision with electrical lines, jumper cables.
- With the trailer loaded keep all axles lowered.
- Do not exceed the speed limit.
- Adapt the speed to the road conditions, the traffic and the weather conditions. Put tyre-chains if needed.
- After using the tipper, close the tarp and clean the vehicle to avoid any mood loosening or leaving any remains on the road.
- Before moving, make sure that the lights are clean and operating, they can be dirty.
- Some models are equipped with folding or retractable bumpers, put in circulation mode before driving on public roads.



- Observe the loading height when passing under a bridge, a viaduct or tunnels.
- Do not put the vehicle into neutral to descend some hills, put a low gear depending on the hill and of the load. Using too much the brake on a hill can cause “Fading” in case of vehicle with drum brake, the drums will heat so much that they expand, and they will avoid a good braking on needed moments.

Do not exceed the maximum permitted suspension pressure indicated on the sticker above the manometer.

8- MAINTENANCE/ REPAIR:

8.1- General warnings

IF THE MAINTENANCE TASKS ARE NOT REGULARLY DONE, A RISK OF THE TIPPER BREAKDOWN AND DANGER IN THOROUGHFARE WILL EXIST. IT WILL ALSO BE A RISK OF DAMMAGE OF THE TIPPER DRIVER.

While the maintenance is getting done, the safety warnings described on the section number 3 of this manual need to be respected, as well as every safety advise:

Stop the tractor unit motor and take off the key before doing any repair, cleaning or lubrication operation or while any maintenance task is getting done.

While the box is getting raised and the maintenance works between the chassis and the box are getting done, use the security tube between both and block the hydraulic line.



8.2- Maintenance periods.

Everyday. Check visually the wheels fixing nuts, the tyres pressure and unwearing, the operation of the electrical system and the ABS or EBS system; this system provides any vehicle being more active safety and being more effective while breaking.

After driving the first 1000 km:

-Make sure that the wheel nuts are tightened.

This checking must be done each time that a wheel is removed. The tightening must be between 600 and 700 Nm.

-Tighten again the suspension and align again the axles (Annex 1).

Everymonth: greasing the drawbar eye. Clean every vehicle element to grease to warrant its proper operation.

Every 3 months: Check the pads condition for the disk brake. It can be controlled on the brake calliper, as it is indicated on the axle's maintenance manual.
Check the tightness of wheel nuts

Every 6 months: Tighten again the suspension elements and clean the valves filters.

Once a year: Check the joints group and also the suspension tightening to warranty the good operation and align again the axles (Annex 1). Also the valves filters need to be clean.

These intervals have been considered for a normal use of the vehicle, so these periods would be shortened in case of using the vehicle under hard conditions.

In addition to basic checking, it is recommended doing an exhaustive inspection before any trip or if we think that it exists any malfunction.

Check the hydraulic installation of the tractor unit, specially the security valve and its tare, as well as the general condition of the oil, the terminals and the hoses



The hydraulic equipment installed in the tractor unit, must send maximum pressure of 150 bar to the trailer.

8.3- Particularities of the maintenance operations

GREASING:

- Before doing the greasing, clean the dust, water and dump.
- Inject the grease until the lubrication point will get out clean grease.
- Do not mix different Brand or specifications oils.
- Greasing points:
    - Lifting equipment joints (cylinders).
    - Tilting point
    - Drawbar eye
    - Mobile parts, hinges, bolts, springs, etc.
    - Hinges of the door and of the lower closures.
    - Turning point of the box with the chassis.

The trailer is delivered with grease “GR MU/EP 2”, (lithium grease). Use the same or equivalent grease.

TRACTOR UNIT OIL TANK:

PIn order to check the oil level, the trailer need to be in horizontal position and the oil must be cold. If you want to add the oil, check that the cover and that the whole area are clean and check the hydraulic oil use according with the following basic information (for other specifications, ask the manufacturer).

DIN 51524 TEIL 2 HLP
ISO L-HM



GENERAL WARNINGS ABOUT THE HYDRAULIC OILS USE

- Do never mix de oils
- Using good oil, of good quality, warranties a good lubrication and durability of the elements.
- The oil tank must be closed; the air is suctioned by a filling cap with the corresponding filter.
- Keep clean the return filters
- Check the oil level; it must have from 35% to 40% more than the working volume of the cylinder.
- The oil change must be done by experts. The oil removed should be kept and thrown away according with the environment protection rules

HYDRAULIC STRUCTURES:

Look for possible leaks.

STICKER AND LIGHTING DEVICES:

Check the stickers and lighting cleaning.

WHEELS AND TYRES:

Check the tyres condition, the traffic band, sides and make sure that there are not any fissures.
Check the tyres pressure.

SCREWS:

Tighten the cylinder screws of the tipper.
Tighten the support screws of the tilting axle.
Check the tightening torque in the wheel.

CLEANING:

Clean the trailer and remove the dirt left and sticking materials

AXLES:

Follow the instructions of annex 1 and, in general, those of the axle manufacture.

8.4- ANUAL Maintenance plan for SAF axles

MAINTENANCE TASKS ON THE AXLE	After first 1000 km	Every 3 months or 30000 km	Every 6 months or 75000 km	Every 12 months or 150000 km
Check the wheel hubs (grease leaks, noise, looseness)				X
Check the brake system: -Brake pads / brake shoes wear -Condition of the brake disc / brake drum- Check the mobility of the brake calliper guide system and the condition of the outer boots- Check brake camshaft and automatic slack adjuster travel		X		
Check diaphragms and Torpres lifters Check the condition of shock absorbers and steering stabilizers Check the condition of brake chambers and brake actuators Grease the bearing support points of the knuckle on self-steering and steering axles				X
Check the bolted connections of the axle with the prescribed torque. Suspension bellows, suspension arms, suspension mounting brackets, and clamps	X		X	

NOTE! **Danger of serious traffic accidents that can result in severe injuries or death.**

- Maintenance work will be carried out in specialized workshops duly authorized and by adequately trained personnel for this purpose.
- For vehicles subjected to extreme service conditions, such as OFF-ROAD or CONTINUOUS SHIFTS, maintenance intervals will be shortened from 12 months/150,000 km to 6 months/75,000 km.
- Non-compliance with maintenance or installation instructions will exempt from warranty rights in case of any kind of issue.

Wheel hub inspection

Check for looseness in the wheel bearings

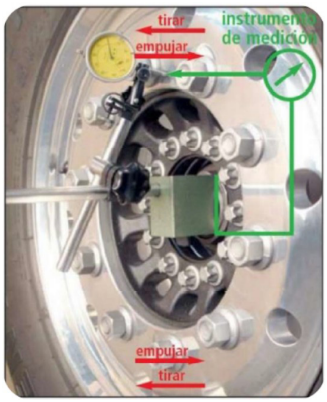

1.Lift the wheel. Do not disassemble!
2.Carefully remove the hubcap.
3.Check the tightening torque of the hub nut (900 Nm).
4.Place the dial gauge as shown in the photograph
5.Pull and push alternately to tilt the wheel. Perform the check throughout the entire range of rotation.

If a tilt play greater than 0.22 mm is obtained, replace the wheel hub!

Check the EBS fault records related to wheel sensors. Intermittent signal failure or reading failure may indicate a problem in the wheel hub due to play.

Check for grease leaks

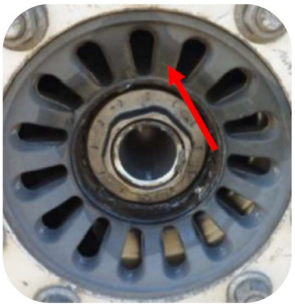

1.Visually inspect the exterior appearance of the hub ventilation channels. If they are stained with grease, it would indicate that all the internal grease of the bearing has been expelled and it is “dry”.
2.Carefully remove the hubcap.
3.Check for any grease leakage inside. If present, it would indicate that all the bearing grease has been expelled.
There may be a small amount of grease around the seals. This situation is normal and does not indicate a problem.


SITUATION OK

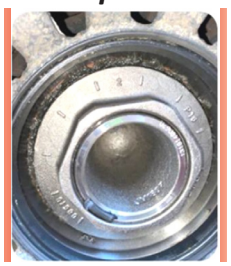
SITUATION NO OK

Bearing noise check



1.Lift the wheel. Do not disassemble!
2.Carefully remove the hubcap.
3.Check the tightening torque of the hub nut (900 Nm).
4.Rotate the wheel in both directions (slowly and quickly).
5.If the wheel does not turn smoothly and/or if a “grinding noise” is heard, hub replacement will be necessary.
Noises can also originate from the brakes. Therefore, we advise performing this check by removing the brake pads

Brake wear check

Disk Brake

Measures of break disk wear disk brake		
Ø(mm)	«A»new (mm)	«B» The wear limit has been reached (mm)
430	45	37
377	45	37

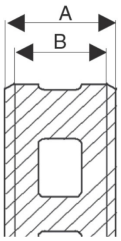

Brake pad wear measurements					
«c»new (mm)			«D» The wear limit has been reached (mm)		
Disk brake pad Ø 430					
Haldex	Wabco	Knorr	Haldex	Wabco	Knorr
30	32	30	13	11	9
Disk brake pad Ø 377					
Haldex	Wabco	Knorr	Haldex	Wabco	Knorr
30	32	30	13	11	9

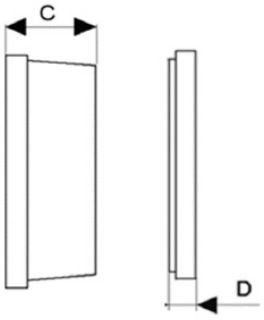

Drum brake

Checking the condition of the brake shoes by removing the inspection plug. The minimum permissible
wear value is indicated by the set of numbers painted on the shoe.

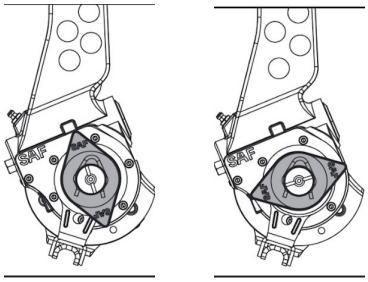

NEW WORN

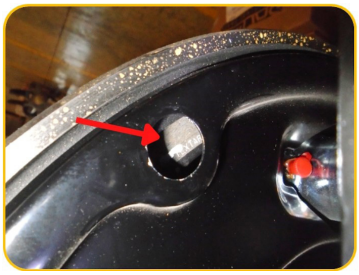

DRUM WEAR MEASUREMENTS		
Brake dimensions	Ø original	Ø Maximum allowable wear
SNK 300 X 200	Ø 300	Ø 304
SNK 367 X 180	Ø 367	Ø 372
SNK 367 X 200	Ø 367	Ø 372
SNK 420 X 180	Ø 420	Ø 425
SNK 420 X 200	Ø 420	Ø 425



Additional checks

Diapers / Torque lifters





- Visually inspect the condition of the diaphragm rubber.
- Ensure there are no air leaks.

Shock absorbers and stabilizers



- Check the condition of the shock absorber.
- Ensure there is no oil leakage.

Brake chambers and actuators



- Check for any air leaks in the brake and parking chamber.
- Visually inspect the push rod and dust boot.

POINTS TO GREASE

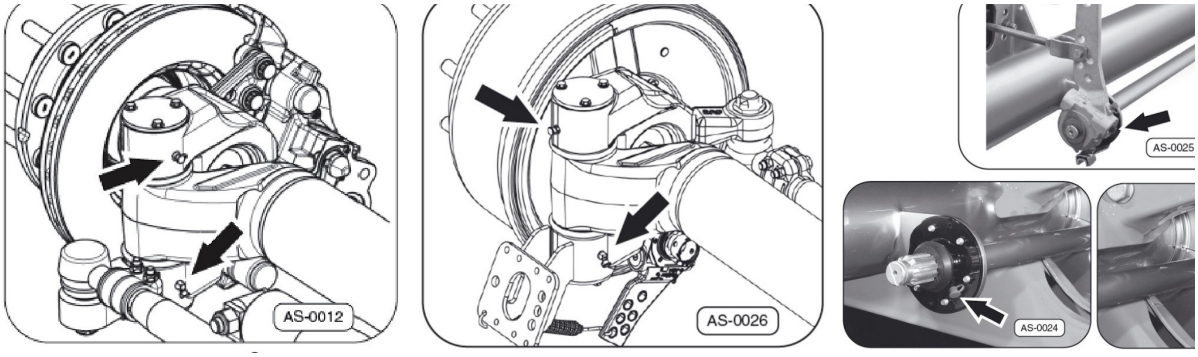

NOTE! To prevent premature wear:

- ***Use exclusively lithium-based lubricant. Ref. 05 387 0031 04***
- ***Apply grease with the vehicle unloaded.***
- ***Do not apply grease to other points not prescribed***

Verification of tightening torques

SAF INTRA

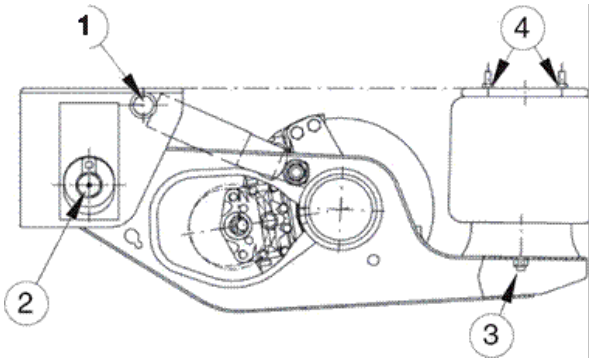

Pos.	Unión atornillada	Par de comprobación (Nm)	Boca de llave
1	M20x1,5	600	30
2	M30	1200	46
3	M16	80	24
4	M12	40	19

NOTE! For aluminum and stainless steel fastening brackets, check bolted joints 1 - 2 every 6 MONTHS

SAF MODUL

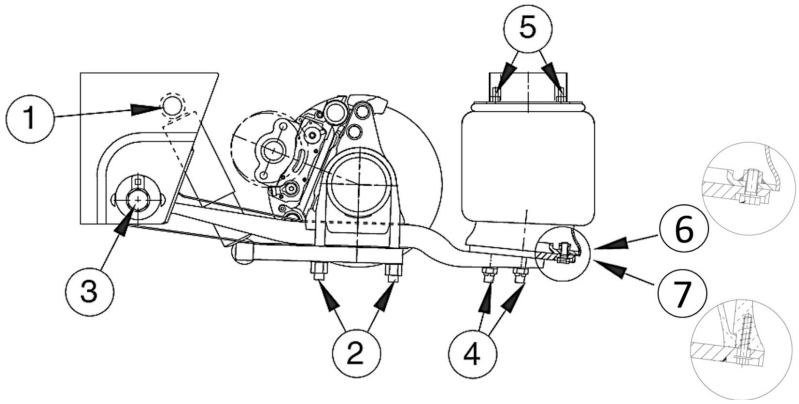

Pos.	Bolted joint	Verification torque(Nm)	Wrench socket
1	M24x2	400	36
2	M22x1,5	580	32
3	M30	1200	46
4	M20	180	30
5	M12	40	19
6 (2)	M12	80	19
7 (3)	K100x40	20	10

(2) In the case of a steel piston
(3) In the case of a plastic component

Maintenance plan for SAF axles Check List

> Wheel hubs

Grease leaks				
	LEFT		RIGHT	
	YES	NO	YES	NO
1º axle	□	□	□	□
2º axle	□	□	□	□
3º axle	□	□	□	□
4º axle	□	□	□	□
5º axle	□	□	□	□

Noises or play in the bearings				
	LEFT		RIGHT	
	YES	NO	YES	NO
1º axle	□	□	□	□
2º axle	□	□	□	□
3º axle	□	□	□	□
4º axle	□	□	□	□
5º axle	□	□	□	□

Brake system condition

Checking the condition of brake pads / shoes				
	LEFT		RIGHT	
1º axle				
2º axle				
3º axle				
4º axle				
5º axle				

Checking the condition of brake discs / drums				
	LEFT		RIGHT	
1º axle				
2º axle				
3º axle				
4º axle				
5º axle				

Otras comprobaciones

Component	Check	Yes	No	1I	1D	2I	2R	3I	3D
diaphragms	Extension/Compression	□	□						
	Cracked diaphragm	□	□						
	Wear due to friction	□	□						
	Air loss	□	□						
Shock absorbers	Oil loss	□	□						
	Damaged body	□	□						
Chambers and actuators	Air loss	□	□						
	Damaged push rod or dust boot	□	□						

Tightening torques

SAF MODUL

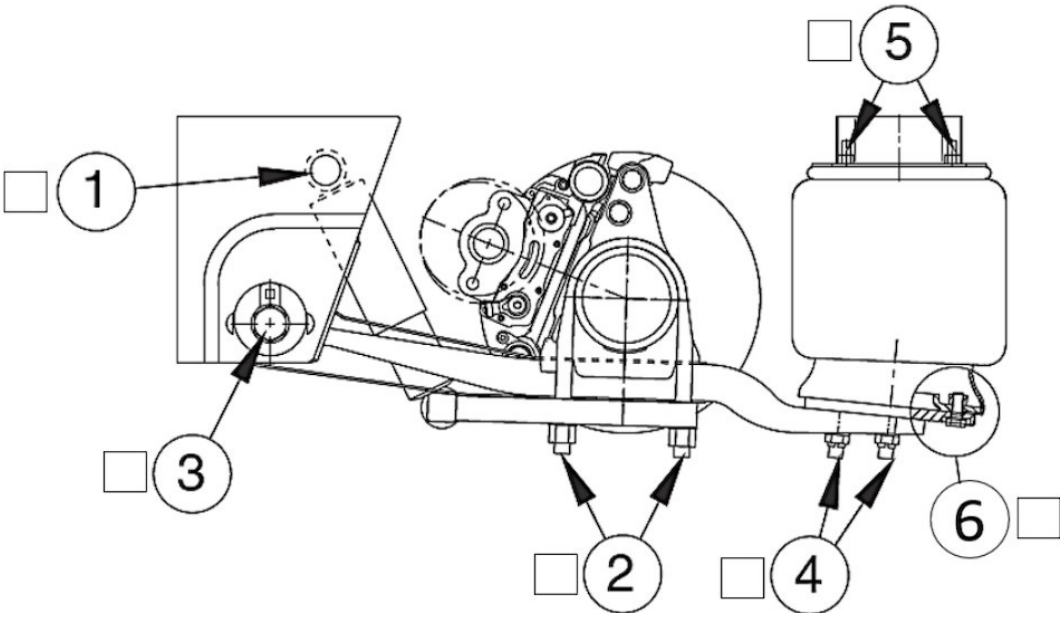

SAF INTRA

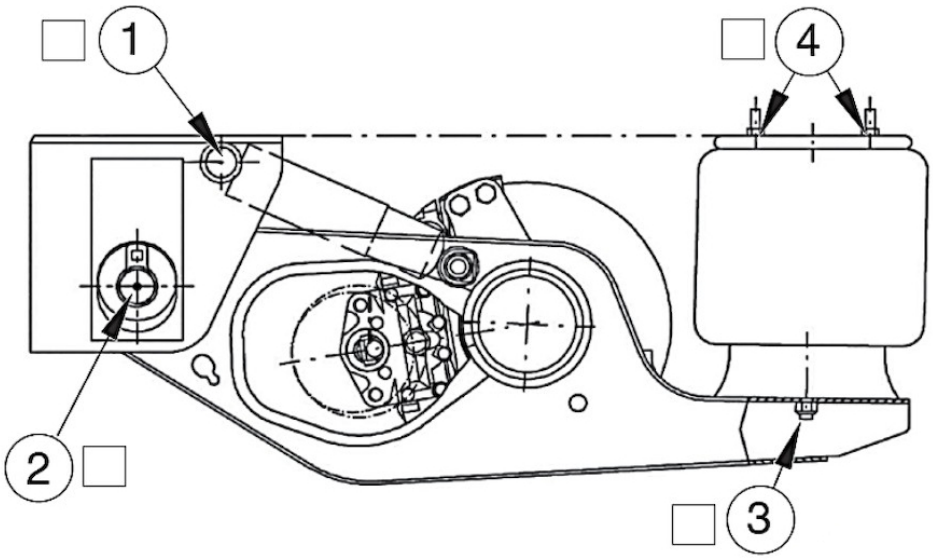

9. ALUHARD 500+ USED AS A TOWING VEHICLE (EUROMODULAR)

9.1. Procedure for coupling the trailer.

Before starting, make sure there are no people or obstacles nearby.

Make sure the trailer is braked (pull the red button on the brake control panel).

It is mandatory to strictly follow the order of this procedure.

1st Lift the bumper of the semitrailer and change the position of the chain clip, securing it to the body.

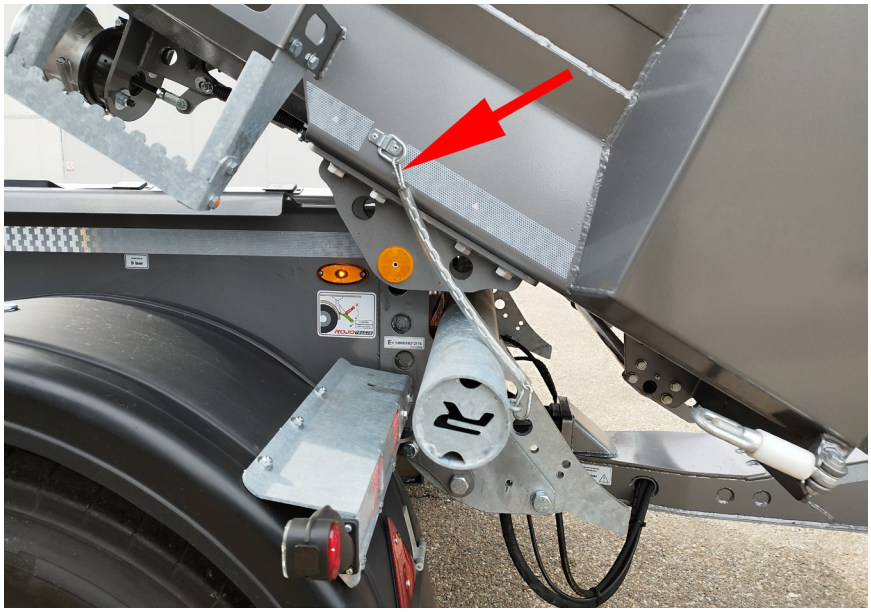

2nd Adjust the height of the tip hook (male) to match the base hook (female)

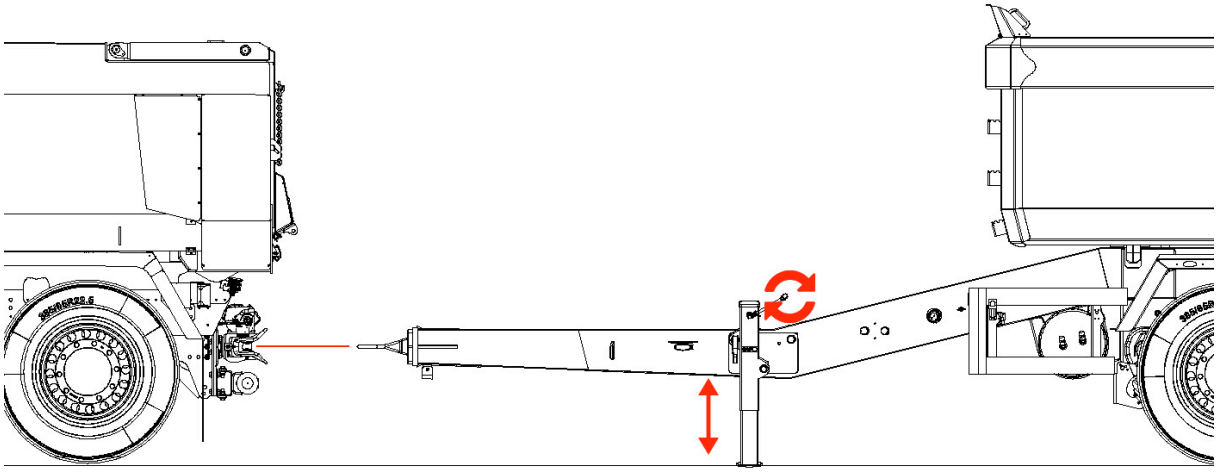

3rd Approach the semi-trailer, seeking proper alignment with the trailer, until they are coupled.

4th Check that the indicator of the base hook is hidden. This ensures that it has been properly coupled.

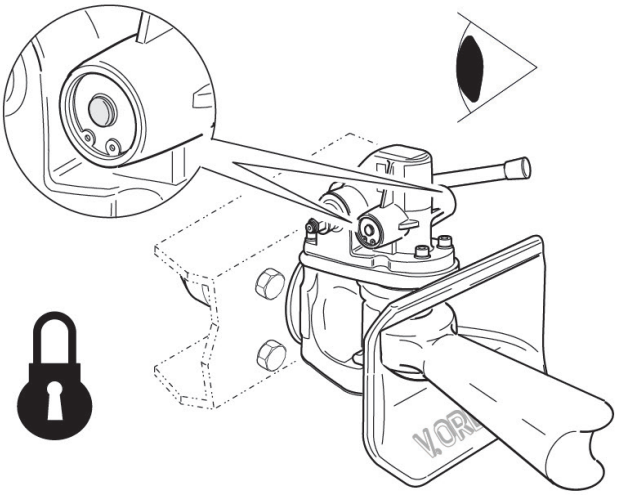

5th Activate the parking brake of the truck unit and the semi-trailer.
6th Connect pneumatic connections (DUOMATIC).

7th Connect the hydraulic and electrical lines.
8th Raise the trailer support leg and put it in the driving position.

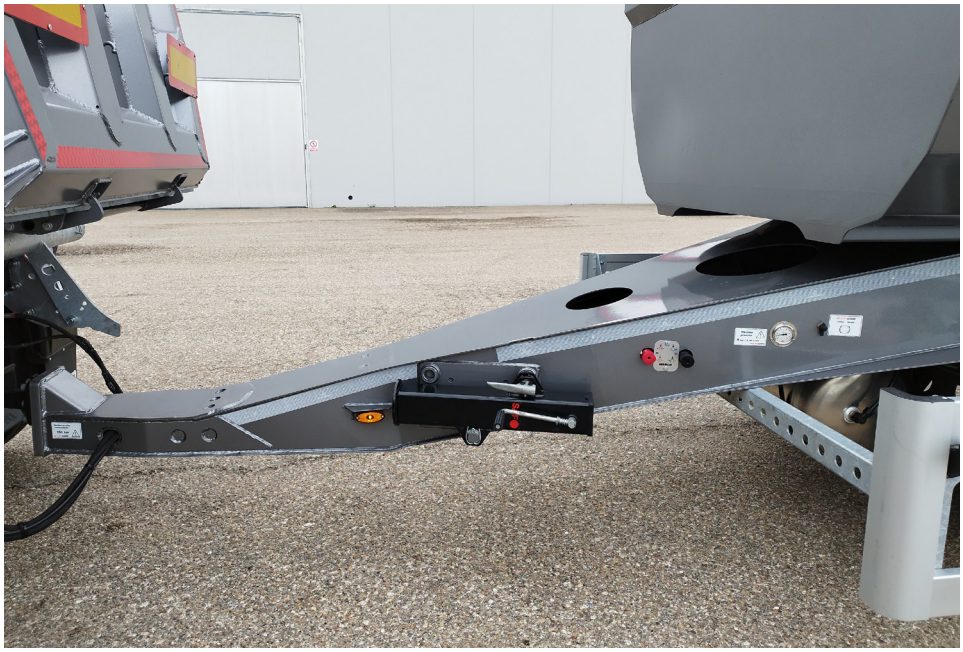

9th Turn the hydraulic tipping selector valve to the trailer tipping position (follow adhesive instructions).



9.2 Procedure for uncoupling the trailer

Park the vehicle on a flat surface.

Before starting, make sure there are no people or obstacles nearby.

It is mandatory to strictly follow the order of this procedure.

1st Activate the parking brake of the truck unit and the semi-trailer.

2nd Activate the parking brake of the trailer (pull the red button).

3rd Put the trailer support leg in the support position and turn its handle until it contacts the ground





4th Disconnect pneumatic connections (DUOMATIC).

5th Disconnect hydraulic and electrical lines.

6th Unlock the base hook by pulling up the handle until it reaches the vertical position. The base hook indicator will become visible, indicating the uncoupling of the hook.

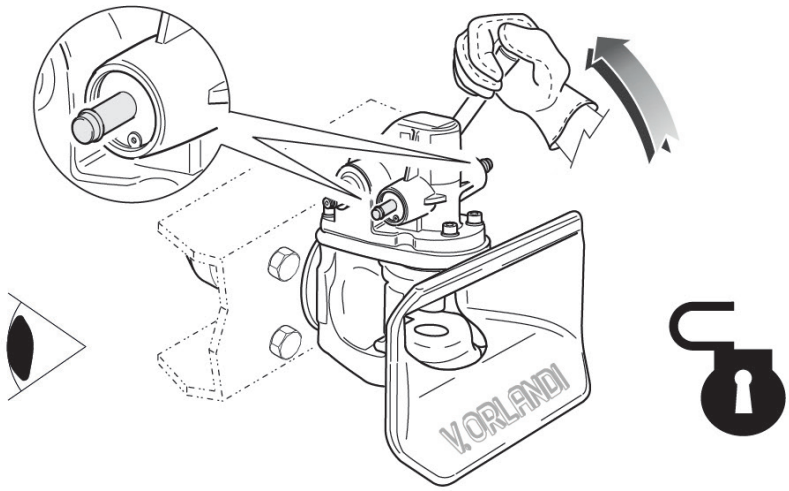

7th Remove the semi-trailer by advancing the towing vehicle forward.

8th Turn the hydraulic tipping selector valve to the semi-trailer tipping position (follow adhesive instructions).



9th Place the bumper in the driving position and move the chain clip to the skirt.

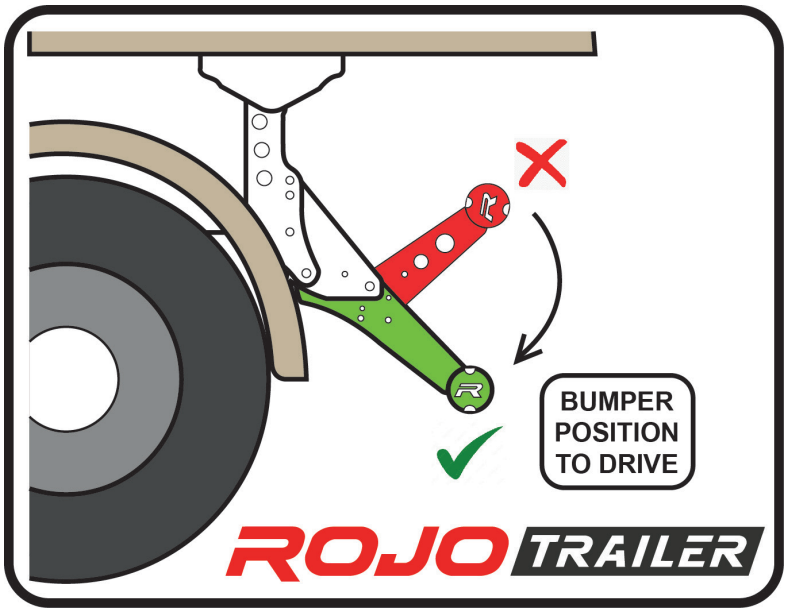

9.3- Select tipping option

The towing semi-trailer is equipped with a hydraulic selector valve, placed at the front of the vehicle, which allows us to choose between tipping the trailer or the semi-trailer.
It also has an explanatory adhesive for these two options.



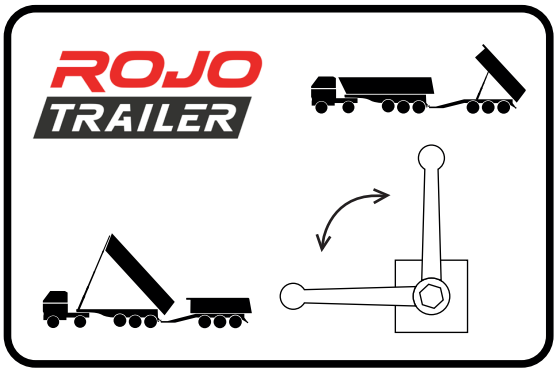

For safety reasons, tipping the semi-trailer with the trailer attached is forbidden.

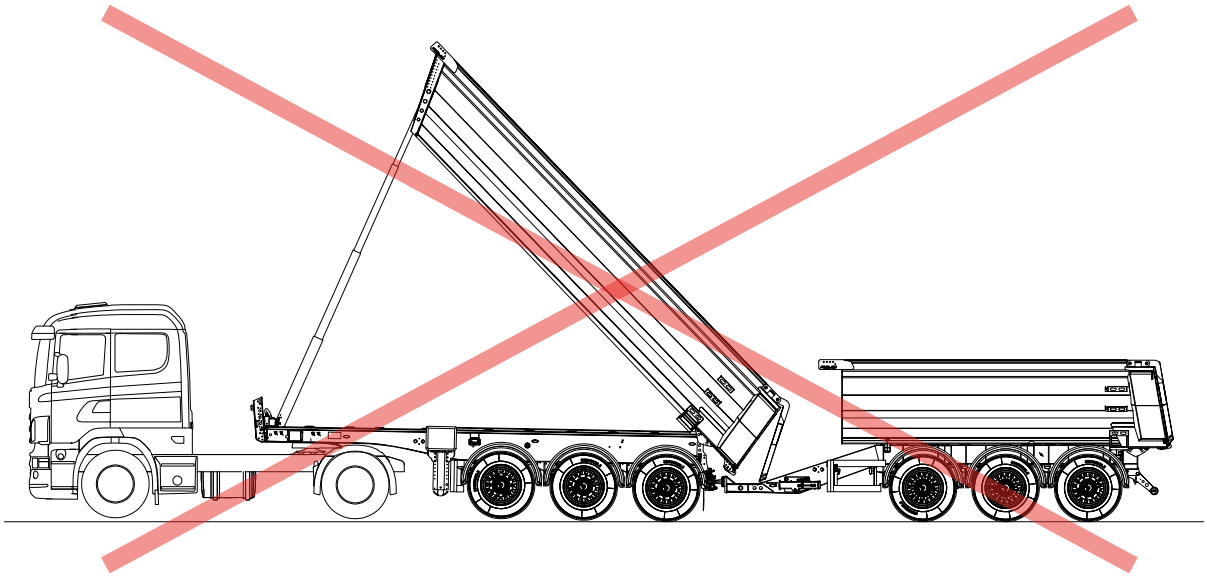

ANNEX 1

It must be done after 1000 km and every year.
Determine the lengths of the diagonals A - C and A - F for the middle axle(reference axle) by comparison measurements, observing the tolerances(± 2 mm).
Check the wheelbases B - C and E - F for the front axle and C - D and F - G for the rear axle and correct, if necessary, observing the tolerances (± 1 mm).

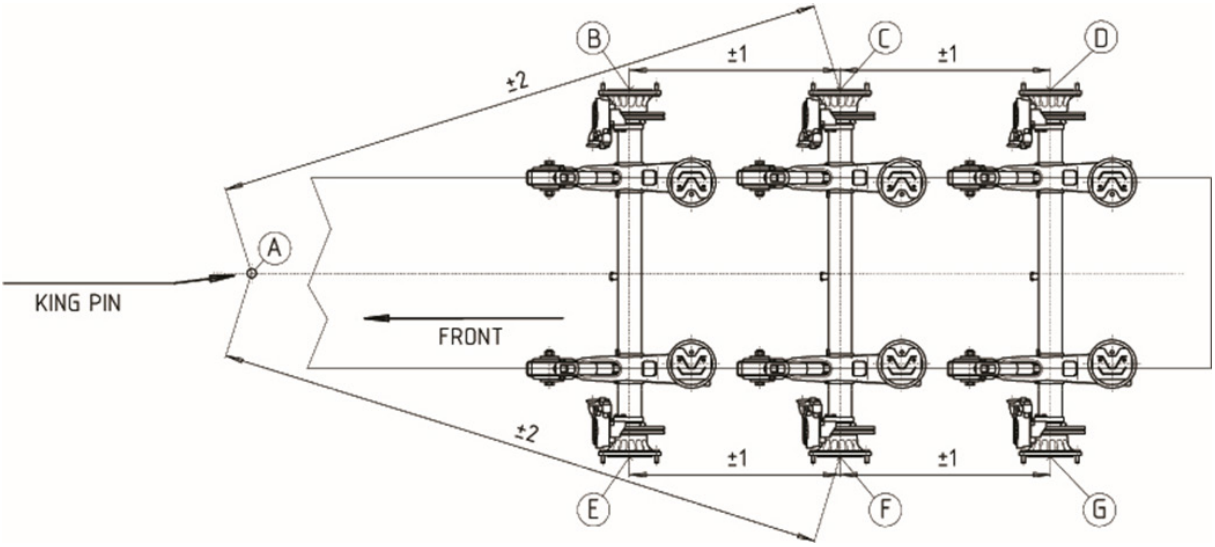

ANNEX 2

TPMS SYSTEM (Tire Pressure Monitoring System)

This system continuously monitors the pressure and temperature of the tires. It consists of sensors mounted inside each tire, which send information to the truck unit, alerting in case of incorrect values. Each tire has a specific location, and each sensor has a unique ID to allow the ECU to identify which sensor the information comes from.
For proper operation, the following instructions must be follow:

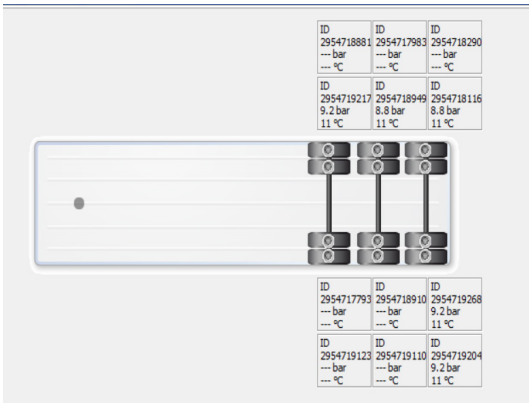



Inflate the tires to the pressures indicated on the vehicle's stickers.

Do not move the tires from their positions; each tire has a specific location on the vehicle.

On twin-wheel axles, in case of tire replacement or repair, reposition the tire in the same position relative to the axle bolts.

It is necessary to replace the sensors every 5 years, which is the duration of their batteries.

IMPORTANT INSTRUCTIONS



PAY ATTENTION TO MAINTENANCE, GREASING,..ETC. OVER THE AXLES. THIS IS SHOWN IN THE MAINTENANCE BOOK WE ENCLOSE.



IT IS IMPORTANT TO DO FIRST MAINTENANCE OVER ALL BOLTS OF FIXATIONS AND BOLTS, RIGHT AFTER FIRST TRANSPORT WITH LOAD ON THE SEMITRAILER.



90% OF PROBLEMS ON AXLES AND SUSPENSIONS ARE ORIGINATED BY LACK OF TRACKING AND FOLLOW UP OF THESE INSTRUCTIONS. NOT FOLLOWING THE INSTRUCTIONS IT WILL CONSIDER A USE MALFUNCTION , AND WILL FORCE TO VOID WARRANTY FOR THE UNIT.



IMPORTANT: AFTER 1ST CHECK-UP, THE INSPECTION FORM SHEET HAS TO BE FILLED IN AND SIGNED, AND SEND EMAIL TO : service@rojotrailer.com, ATTACHING THE TECHNICAL DATA SHEET.

IN CASE OF DOUBT OR IF YOU NEED ANY FURTHER INFORMATION ABOUT MAINTENANCE, PLEASE CONTACT OUR AFTER-SALES DEPARTMENT Tlf. +34 947 54 64 11.