ROJO TRAILER

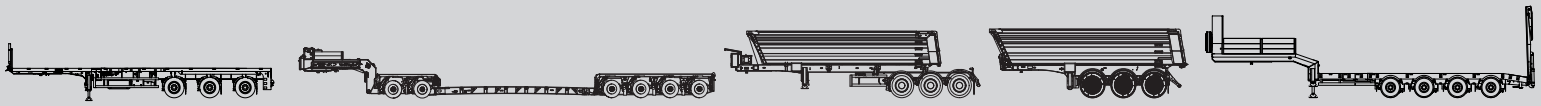

GP LINE



# RGPN

## USER GUIDE

# CONTENTS


**1.- SAFETY ..... 3**

**2.- TECHNICAL DATA ..... 5**

**3.- ADAPTATION TO TRACTOR TRUCK ..... 7**

**4.- OPERATING ..... 8**

4.1.- COUPLING/UNCOUPLING OF TRACTOR TRUCK ..... 8
4.2.- LOADING ..... 9
4.3.- SPREAD OUT/ HIDE IN EXTENDABLE BEAM (OPTIONAL) 14
4.4.- LIFTABLE FRONT AXLE (OPTIONAL) ..... 16
4.5.- UP / DOWN LOADING PLATFORM ..... 17
4.6.- UP / DOWN RAMPS (OPTIONAL) ..... 18
4.7.- SELF-STEERING AXLE (OPTIONAL) ..... 19
4.8.- PULL OUT / IN HYDRAULIC SIDE PLATFORMS (OPTIONAL) 20

**5.- MAINTENANCE ..... 21**

5.1.- MAINTENANCE SCHEDULE ..... 21
5.2- Particularities of maintenance operations ..... 22
5.3.- ANUAL Maintenance plan for SAF axles ..... 23

# 1.- SAFETY



***This symbol will always go along the instructions to prevent material damages, personal injuries or avoid risky situations for persons.***

Not following these instructions will lead to harms which ROJO won´t be responsible for.

## MAINTENANCE TASKS TO BE DONE ON VEHICLE

- This vehicle is a critical safety system. Please proceed carefully with maintenance procedures. A careless work may cause damages and/or accidents.
- Block lowbed wheels properly when working under the unit.
- Use solid wheel chocks under the lowbed doing works that require removing wheels.
- When removing heavy parts, fasten them on a safe way.
- Avoid unnecessary contact will oils and lubricants. Apply lotion on areas that are not protected.
- Leave a safety distance with the moving elements of the system when activating hydraulic components.
- Check that manual steering is disconnected and is kept like this when working over moving elements of the system.
- Surface of cylinder pin can be damaged easily. Damages will lead to leaks.
- To check hydraulic components, use the right tools for high pressures generated inside the hydraulic system.
- Use only original ROJO spares in maintenance and repairing works.

## ENVIRONMENT

– Don´t throw away used oil, lubricants or hydraulic fluid on drains, culverts or the ground. These practices are not only forbidden but also will seriously contaminate the environment.
– Used oils, lubricants and hydraulic fluids must be treated by companies authorised for its recycling. All these used fluids must be stored separately.
– Used batteries must be treated by companies authorised for its recycling.

## READY-MADE ELECTRIC WIRING



***It is forbidden to manipulate or cut any prefabricated electric wire to change its length. This can cause damages or interfere in the right functioning of the system.***

# 2.- TECHNICAL DATA

## ELECTRIC SYSTEM

| | |
|---|---|
| Voltage: | 24 V |
| Electro pump: | 2,2 Kw. |
| Electro pump fuse: | 200 A |
| Power source cable from tractor truck battery to electro pump: | 50 mm2 |

## REMOTE CONTROL

Battery type: 3 non rechargeable batteries of 1,5 V: AAA
Module RF: Frequency 433,92 MHz

## LUBRICANT GREASE FOR THE STEERING RODS

Vehicle leaves factory with high quality lithium soap KP2K-30 (FIN 51 825).
For a new greasing, please use the following greases or with a similar quality.

| | | |
|---|---|---|
| ARAL | Aralub HLP 2 | from -30ºC to +130ºC |
| BP | Energrease LS-EP 2 | from -20ºC to +120ºC |
| DEA | Gilssandro EP 2 | from -30ºC to +140ºC |
| ELF | EPEX ELF 2 | from -30ºC to +130ºC |
| ESSO | BEACON EP 2 | from -25ºC to +130ºC |
| KLUBER | Centoplex GLP 402 | de -20ºC a +130ºC |
| MOBIL | Mobilux EP 2 | de -20ºC a +120ºC |
| SHELL | Alvania EP 2 | de -20ºC a +120ºC |

## LUBRICANT GREASE FOR AXLE BEARINGS, LEVERS AND BRAKE CAMSHAFT

Vehicle leaves factory with Rhenus grease, type Rhenus Norplex LKR 2 NLGI Class 2.
For a new greasing, please use same grease or with a similar quality

## HYDRAULIC SYSTEM

Capacity of hydraulic tank: 7 litres.

## HYDRAULIC OIL

Vehicle is fitted at the factory with oil Shell TELLUS S2 V32 (Mediterranean Area) or TELLUS S2 V15 (Nord Area). This is a mineral hydraulic oil with low content in zinc and a high viscosity to which it has been added additives against wearing, oxidation, rust and foam. This oil can adapt perfectly to extreme and changing conditions.

| | |
|---|---|
| ISO | 11158 - HV category |
| GB | 111181-1-94 - HV category |
| DIN | 51 524 / 3 - HVLP category |
| DENISON | HF-0 (HF-1 y HF-2) |
| EATON (VICKERS) | M-2950-S / I-286-S |
| CINCINNATI-MILACRON | P68, P69, P70 |
| AFNOR | NF E 48-603 |
| ASTM | 6158-05 - HV category |

Only use oils that meet the following features:

| | | Mediterranean Area | Nord Area |
|---|---|---|---|
| METHODS | CHARACTERISTICS | ISO 32 | ISO 15 |
| ISO 12185 | Density 15 ºC, kg/dm3 | 0.872 | 0.872 |
| D 445 | Viscosity at 40 ºC, mm2/ s | 32 | 15 |
| D 445 | Viscosity at 100 ºC, mm2/ s | 6,1 | 3.8 |
| ISO 2909 | Viscosity content | 143 | 142 |
| ISO 3016 | Flow point, ºC | -39 | -42 |
| ISO 2592 | Flash point, ºC | 210 | 170 |

Ask your hydraulic oil supplier about which of their products accomplishes the mentioned specifications.

| | | | |
|---|---|---|---|
| SHELL | Tellus S2 V 32 | Tellus S2 V 15 | Fitted at factory |
| ELF | Hydrelf 32 | | Compatible hydraulic oils |
| TOTAL | Equivis ZS 32 | Equivis ZS 15 | |
| TEXACO | Rando HDZ 32 | Rando HDZ 15 | |
| BP | Energol SHF 32 | Energol SHF 15 | |
| ESSO | Univis N32 | Univis N15 | |
| AGIP | Arnica 32 | Arnica 15 | |

***It is not permitted to mix different types of oils or refill the system biodegradable oil without written authorization ROJO.***

# 3.- ADAPTATION TO TRACTOR TRUCK

ROJO steered lowbed electro pump needs power supply (+24volts) from tractor truck battery. That is why is needed to install an electric plug NATO VG 96 917 on tractor truck.

## PLUG INSTALLATION

NATO VG 96 917 Plug, has 2 pins for connection as shown in this drawing. (fig. 3.1)

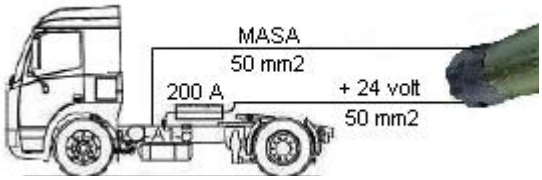


Fig. 3.1 Installation scheme

- Connect pin ( + ) to battery +24 volts with a 50 mm2 cable and a 200ª fuse on the output exit.
- Connect pin ( - ) to mass with 50 mm2 cable.

To determine wire length, please remind that when coupling the lowbed, it will be connected to its relative plug on front side of the lowbed, together with the rest of electric and air connections (fig. 3.2).



Fig. 3.2 NATO VG 96 917 lowbed connector

***Assembling of wiring system and length of the wires must allow the free turning of the lowbed avoiding that it get hooked with other components or tighten up when turning.***

***It is recommended to place a switch to isolate the connector when it is not connected to its plug on the lowbed.***

# 4.- OPERATING

## 4.1.- COUPLING/UNCOUPLING OF TRACTOR TRUCK

***Before starting, make sure that there aren't any people or obstacles close***

### COUPLING TRACTOR TRUCK

-Make sure that the trailer is braked (pull the red pusher button).
-Adjust height of the drawbar eye for the correct attached with the drawbar.
-Approximate the tractor unit looking for a correct alignment with the trailer

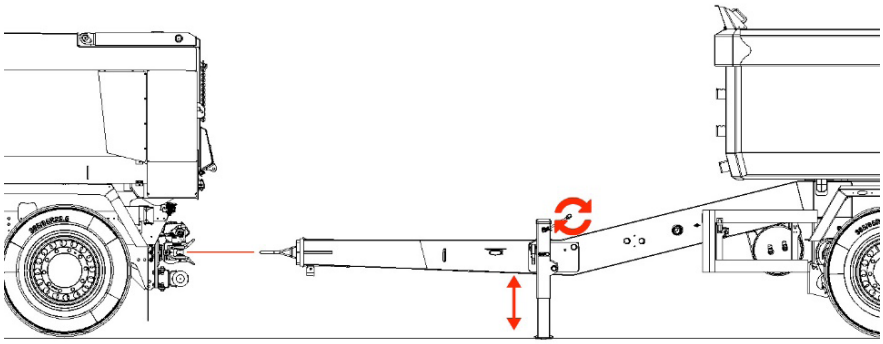

***Plug every connection between the tractor unit and the platform; hydraulic, electric, and pneumatic connections (DUOMATIC)***

### UNCOUPLING TRACTOR TRUCK

***Park the vehicle on a flat surface.***

-Activate the parking brake of the truck unit and the semi-trailer.
-Activate the parking brake of the trailer (pull the red button).

***Unplug every connection between the tractor unit and the platform; hydraulic, electric, and pneumatic connections (DUOMATIC)***

Remove the semi-trailer by advancing the towing vehicle forward.

## 4.2.- LOADING

***Please make loading and unloading operations with caution. When loading, respect a right sharing of loads.***

Load Center Point on the vehicle LC is marked on one of the sides of the main platform (fig. 4.9) by a stick. (fig. 4.10).

This stick marks the LC of the vehicle
And how LC moves forward every extension meter



Fig. 4.9 Stick location

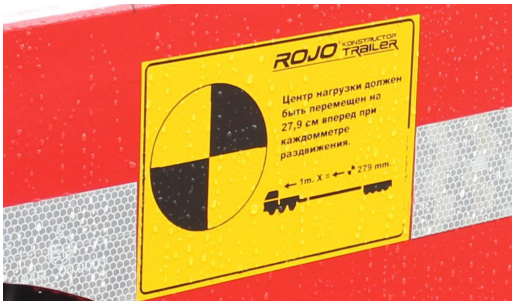


Fig. 4.10 LC indications

***To ensure a right share of the load, we have to match the load Centre of Gravity CDG with the Load Center Point LC of the vehicle.***

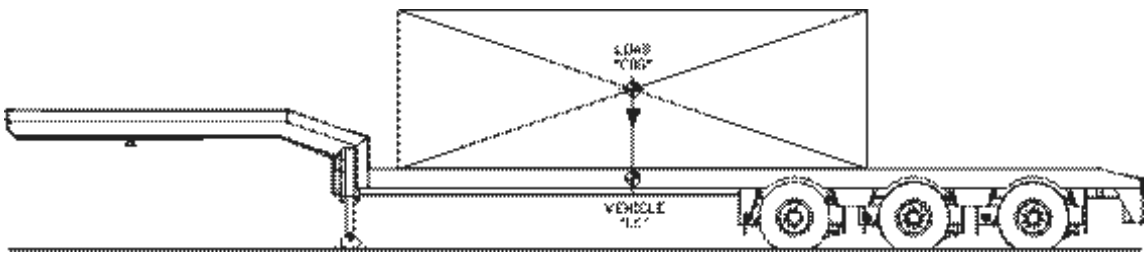

***See specific load charts for extendable vehicle loads and CDG offsets.***

***Before loading or unloading, check that the axle of the rear landing leg is in good position and secured.***

***If this element is not in correct position and not secured, it can harm persons or objects.***

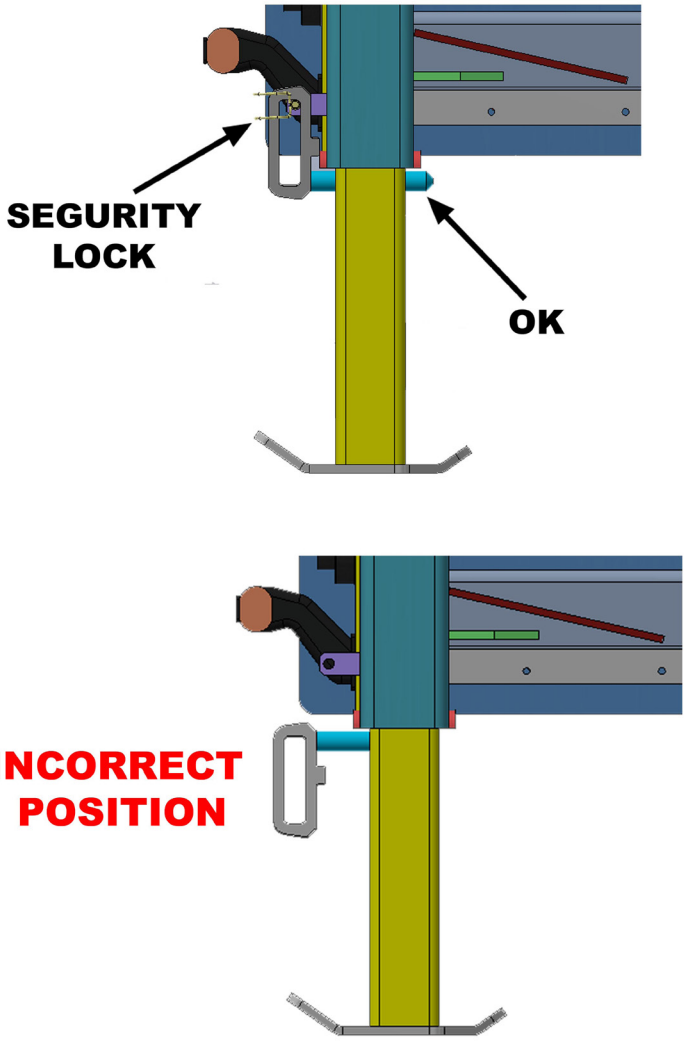

## MINIMUM SUPPORT LENGTH

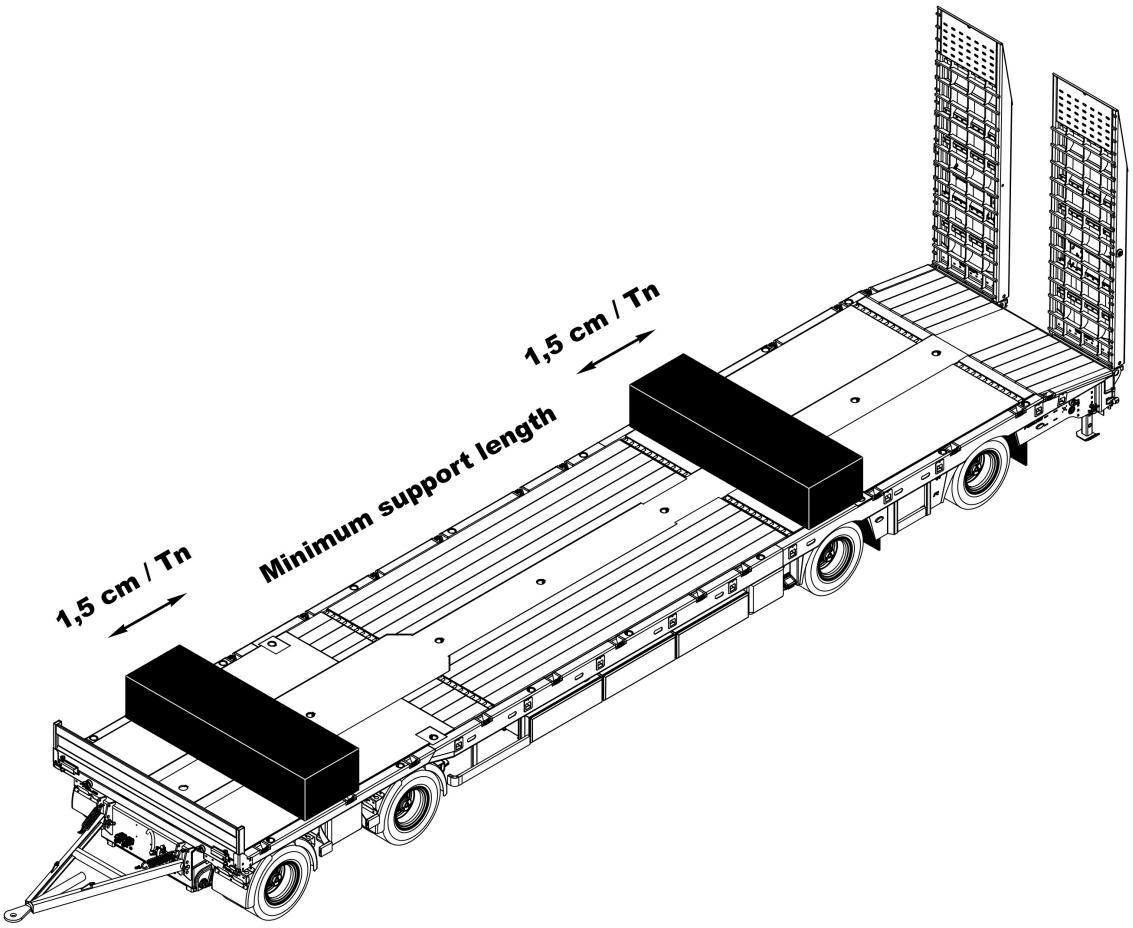

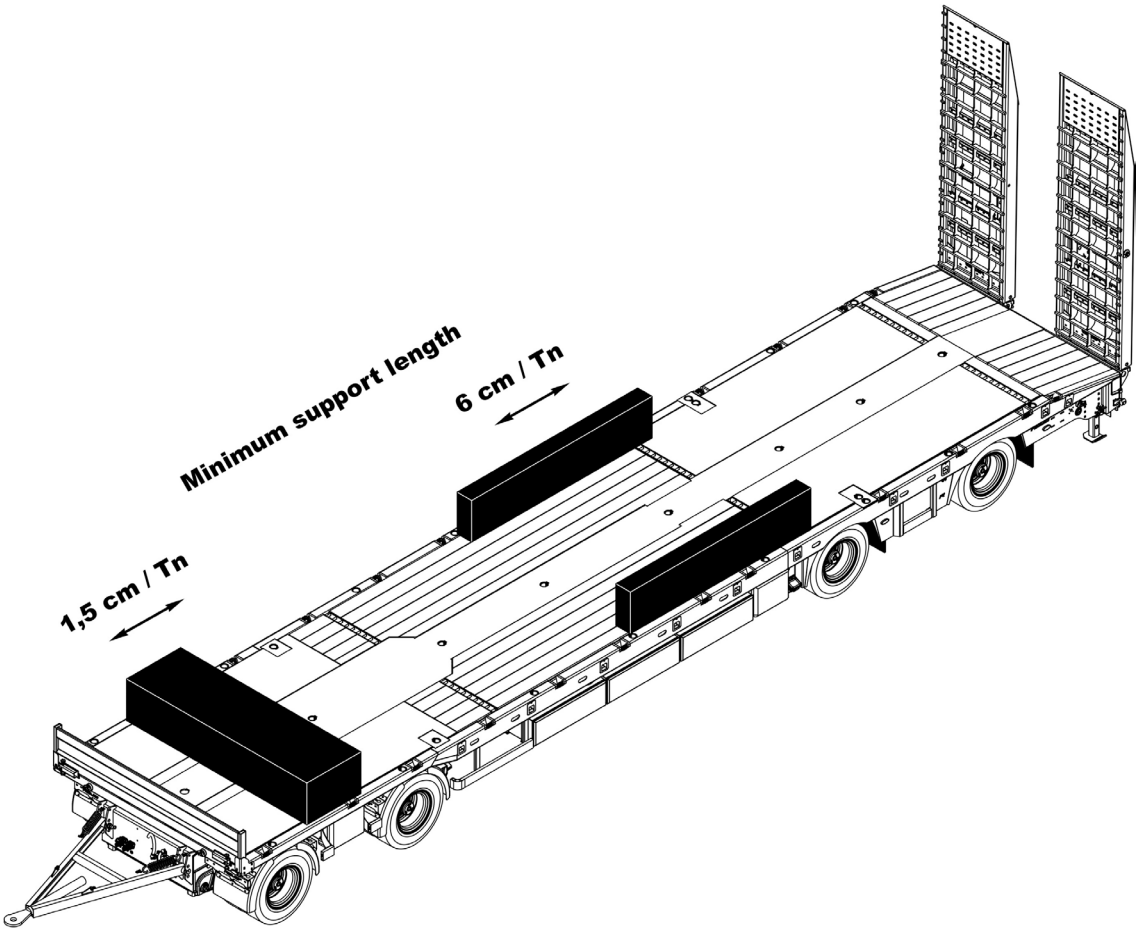
Minimum support length
6 cm / Tn
1,5 cm / Tn

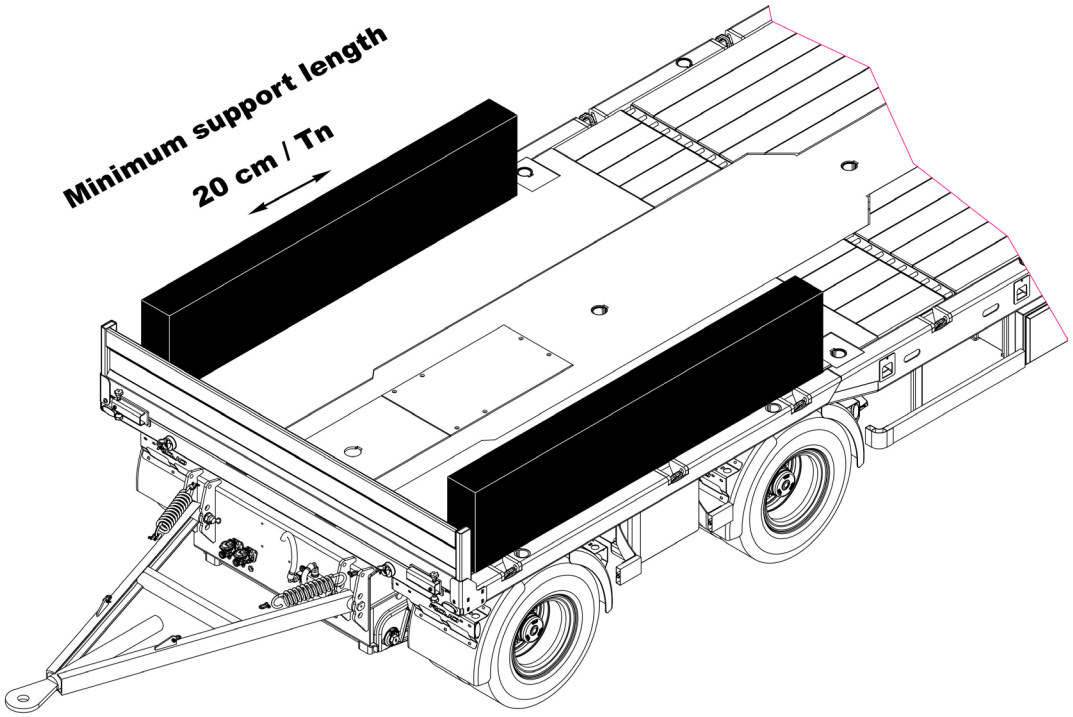
Minimum support length
20 cm / Tn

***Lateral loads are forbidden in the neck***

***Respect max load of lashing rings(fig. 4.11)***



Fig. 4.11 Lashing ring



Fig. 4.12 Registration

***Chek ring registration (fig. 4.12)***

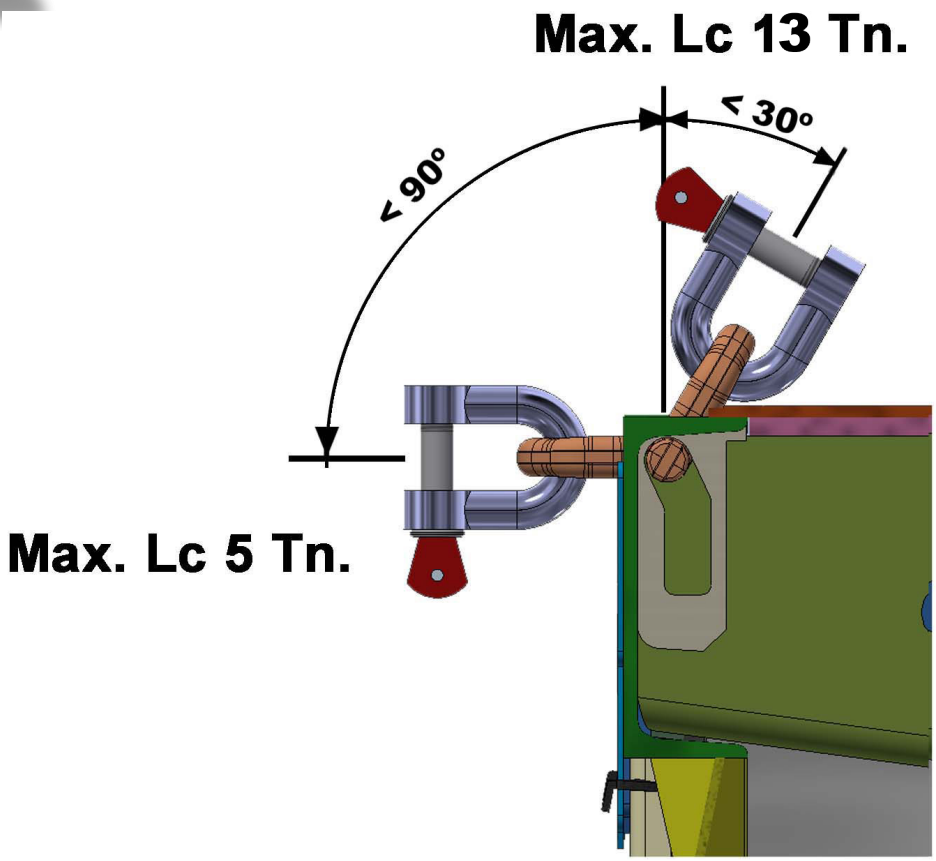

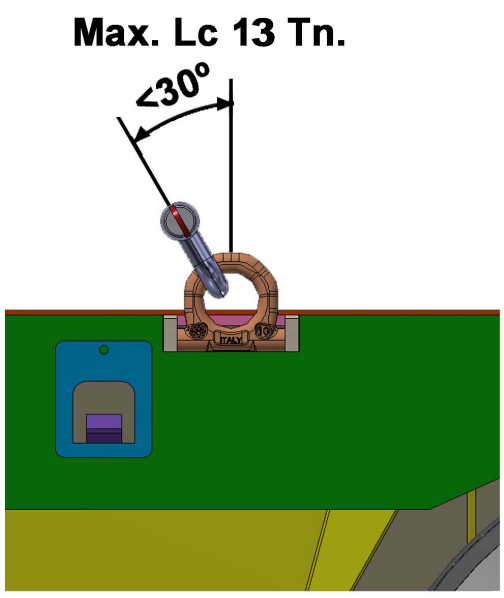


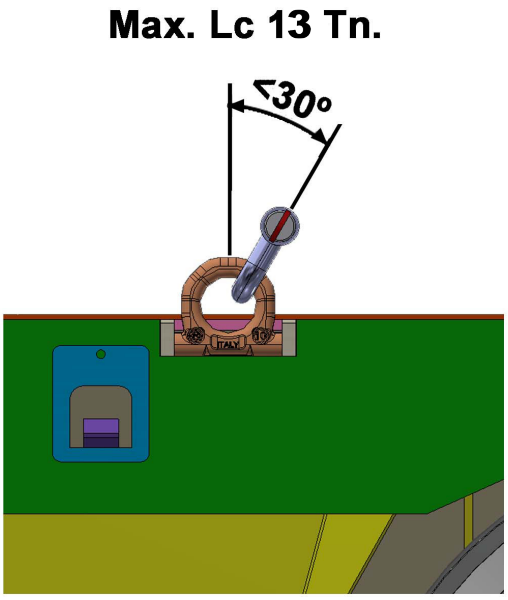


## 4.3.- SPREAD OUT/ HIDE IN EXTENDABLE BEAM (OPTIONAL)

***Spread in and out platform when there is no load on it.***

***before extend/retractDepressurize hydraulic lines by pressing the white button located next to the pressure gauges.***

***Block platform axles before starting this operation.***

***Make this operation softly and keeping an eye over the platform perimeter.***

***When you pull on the extendable beam, please check that any object or person is in the free area between platforms.***

- Connect the auxiliary blocking coil (fig. 4.13) to the quick plugs-in (fig. 4.14) on every extendable beam, to act over each of them.

- Open blocking valve (fig. 4.15) checking batons movement (fig. 4.17) to ensure that the 2 blockings are released.

- Spread out or pull inside the extendable platform to the required measurement, using tractor drawbar pull traction smoothly.

- Lock the blocking valve (fig. 4.16) checking batons (fig. 4.17) go back to its original position to ensure that both blockings are closed.

- Unplug and take away the auxiliary blocking coil.

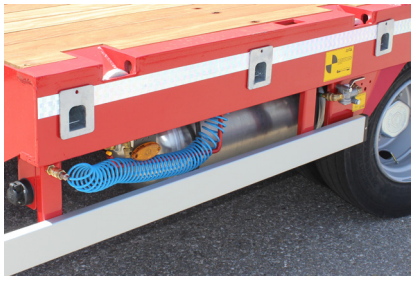

Fig. 4.13 Blocking coil

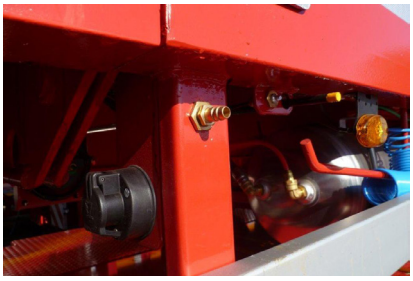

Fig. 4.14 Quick blocking plug-in



Fig. 4.15 Opened blocking valve




Fig. 4.16 Closed blocking valve

***Before driving, please check that all blocking batons (fig. 4.17) are inside vehicle profile to ensure that all blockings are conveniently locked.***

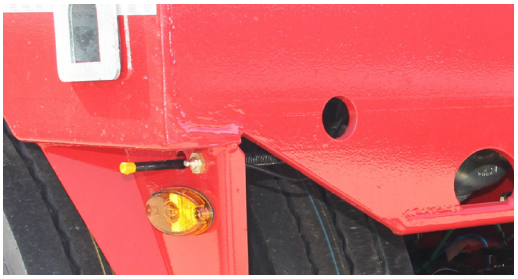

Fig. 4.17 Blocking baton

## 4.4.- LIFTABLE FRONT AXLE (OPTIONAL)

Control of lifting axles is automatic and depends on the load carried. Switch (fig. 4.18) is used to disconnect the automatic lift exceptionally.

***Switch has to be ALWAYS in "I" position (fig. 4.19).***

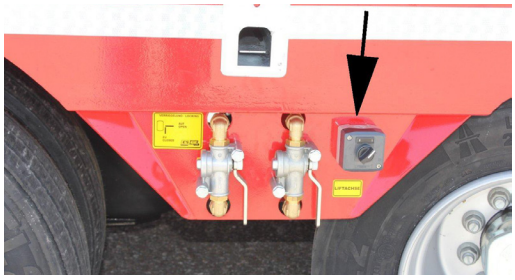

Fig. 4.18 Lifting axle switch




Fig. 4.19 Switch in "I"position

***Disconnect switch (position "0") ONLY in exceptional cases, out of public roads.***

## 4.5.- UP / DOWN LOADING PLATFORM

***Driving out of ride height is only permitted up to 10 Km/h just to avoid some obstacles on the road, but only occasionally.***

Loading Platform can go up and down using the Up&Down pneumatic valve (fig. 4.20).
- Turn lever right and left to raise or lower platform height.
- Turn the lever to its central position to automatically return to ride height.

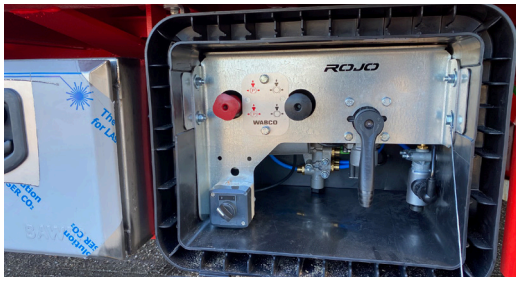


Fig. 4.20 Up&Down Pneumatic valve

***Once we pass the obstacle, immediately return to ride height pressing out the lever.***

In case the unit is equipped with Oscillating Neck, loading platform will be levelled raising or lowering neck.
- Connect power supply activating the battery disconnector.

Following functions can be made either from the button pad over neck area (fig. 4.21) or with the remote control.



Fig. 4.21 Oscillating Neck button pad

- Press button "⇓" to lower neck so that platform is raised to be levelled.
- Press button "⇑" to rise neck height so that platform height is lowered to be levelled.
- Disconnect power supply by deactivation of battery disconnector.

## 4.6.- UP / DOWN RAMPS (OPTIONAL)

***It is forbidden to stay under or near the ramps during this operation. Risk of crushing damages on persons or objects if ramps fall down.***

***Before operating ramps, release security cable on the ramps (fig. 4.22) and lower ramp supports (fig. 4.23).***



Fig. 4.22 Ramp security cable



Fig. 4.23 Ramp supports

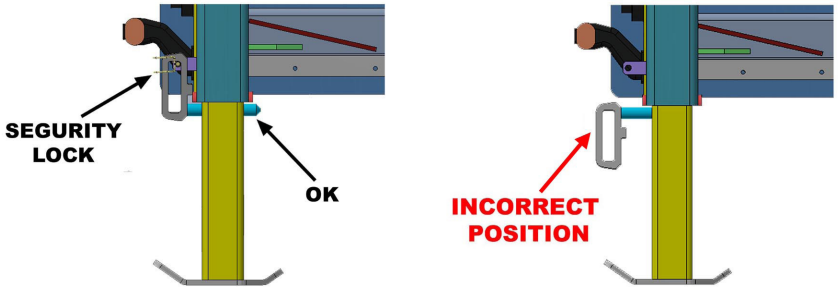


Ramps can be operated by means of distributor levers + a power button (fig. 4.24).
Lever 1 (fig.4.24) is used to up and down ramps.
Lever 2 (fig.4.24) is optional for left ramp side displacement.
Lever 3 (fig.4.24) is optional for right ramp side displacement.
Lever 4 (fig.4.24) is optional for left ramp side displacement.
Power button 5 (fig.4.24) is used to switch on the pump.

- Follow stick indications.

***Once finished this operation, fasten ramps with security cable (fig. 4.22) and upload ramp supports (fig.4.23).***

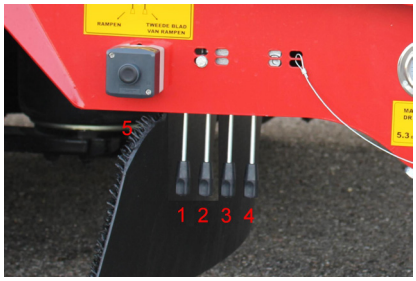


Fig. 4.24 Ramp controls

## 4.7.- SELF-STEERING AXLE (OPTIONAL)

Self-steering axle is automatically blocked when driving backward.

***Check axle blocking before driving backward.***

It is also automatically blocked when driving forward above 40 Km/h and released under 35 Km/h.
However, you can block it permanently driving forward and backward by means of manual switch (fig. 4.25) in position “I” (fig. 4.26)

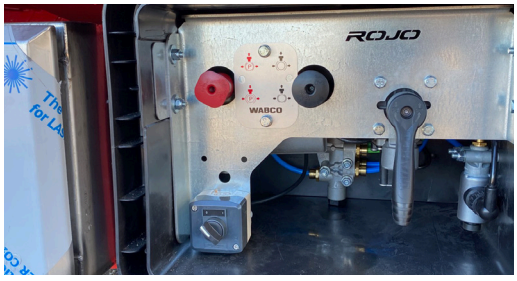


Fig. 4.25 Axle blocking switch



Fig. 4.26 Switch in “I” position

***To drive with self-steering axle disconnect blocking switch (position “0”).***

## 4.8.- PULL OUT / IN HYDRAULIC SIDE PLATFORMS (OPTIONAL)

***It is forbidden to stay under, by or near the hydraulic platforms during this operation. Risk of crushing damages on persons or objects.***

Platforms can be operated by means of distributor levers (fig.27) and optionally by a remote control.
Lever 1 (fig.4.28) is used to pull out / in front platforms.
Lever 2 (fig.4.28) is used to pull out / in rear platforms.
Power button 3 (fig.4.28) is used to switch on the pump.

- Follow stick indications.




Fig. 4.27 Platforms controls situation




Fig. 4.28 Platform controls

# 5.- MAINTENANCE

## 5.1.- MAINTENANCE SCHEDULE

Every day: visual inspection of the wheel nuts, tire pressure and wear, operation of the electrical system and the ABS or EBS system, this system gives the vehicle more active safety, more braking efficiency.

At 1000 km:
-check tightening of the wheel nuts.
This check must be performed each time a wheel is removed. The tightening torque should be between 600 and 700 Nm.
-Retight the suspension and re-align the axles (Annex 1)

Every month: change the grease of the disc of the 5th wheel after cleaning the disc and the KP, of all the elements of the vehicle to grease to ensure the good operation.

Every 3 months: check the condition of the brake pads, for disc brakes, this warning light is located on the brake caliper, as indicated on the axle maintenance manual. For drum brakes, the warning light is located on the automatic brake levers.

Every 6 months: re-tighten the suspension elements and clean the valve filters.

Once a year: Check the joints, and also tighten the suspension to ensure proper operation and re-align axles (Annex 1), also clean the valve filters.

These intervals have been made for normal use of the vehicle, reason why, these intervals are shortened in case of using the vehicle in very hard conditions.

In addition to the basic reviews, a thorough inspection is recommended before each trip or suspected of malfunction.

## 5.2- Particularities of maintenance operations

**GREASE:**
- Before greasing, clean the dust, water and mud.
- Inject grease until the lubrication point suppresses clean grease.
- Do not mix oils of different brands or different specifications.

The vehicle leaves the factory with “AGRIP GR MV / EP 2” grease (lytic grease). Use the same or equivalent.

**OIL TANK**

To check the oil level, the vehicle must be horizontal and the oil must be cool. If you want to add the oil, ensure the cover and general area cleanliness and use of hydraulic oil according to the following basic data (for other specifications, consult the manufacturer).



***GENERAL NOTICES ON USE OF HYDRAULIC OILS***

- Never mix the oils.
- A good oil, of good quality, ensures a good lubrication and durability of the elements.
- The oil tank must remain closed; The air is sucked by means of a filling cap with the corresponding filter
- Keep the return filters clean.

-Verify oil level, it should contain 35% to 40% more than the working volume of the cylinders.
- The oil change must be done by experts. Please save the extracted oil and dispose of it according to environmental regulations.

HYDRAULIC STRUCTURES:
Check for leaks.

STICK AND LIGHTING DEVICES:
Check the cleaning of the stickers and lights.

WHEELS AND TIRES:
Check the condition of the tires, circulation belt, sidewalls and make sure there are no cracks.
Check the tire pressure

CLEANING:
Wash the trailer and remove any remaining dirt and adhering materials.

AXLES:
Follow the instructions in Annex 1 and in general those of the axle manufacturer.

## 5.3.- ANUAL Maintenance plan for SAF axles

| MAINTENANCE TASKS ON THE AXLE | After first 1000 km | Every 3 months or 30000 km | Every 6 months or 75000 km | Every 12 months or 150000 km |
|---|---|---|---|---|
| Check the wheel hubs (grease leaks, noise, looseness) | | | | X |
| Check the brake system: -Brake pads / brake shoes wear -Condition of the brake disc / brake drum- Check the mobility of the brake calliper guide system and the condition of the outer boots- Check brake camshaft and automatic slack adjuster travel | | X | | |
| Check diaphragms and Torpres lifters Check the condition of shock absorbers and steering stabilizers Check the condition of brake chambers and brake actuators Grease the bearing support points of the knuckle on self-steering and steering axles | | | | X |
| Check the bolted connections of the axle with the prescribed torque. Suspension bellows, suspension arms, suspension mounting brackets, and clamps | X | | X | |

***NOTE!*** **Danger of serious traffic accidents that can result in severe injuries or death.**

- Maintenance work will be carried out in specialized workshops duly authorized and by adequately trained personnel for this purpose.
- For vehicles subjected to extreme service conditions, such as OFF-ROAD or CONTINUOUS SHIFTS, maintenance intervals will be shortened from 12 months/150,000 km to 6 months/75,000 km.
- Non-compliance with maintenance or installation instructions will exempt from warranty rights in case of any kind of issue.

## Wheel hub inspection

### Check for looseness in the wheel bearings

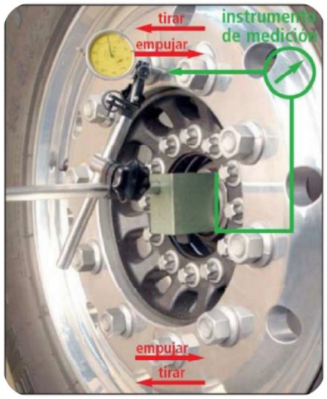


1.Lift the wheel. Do not disassemble!
2.Carefully remove the hubcap.
3.Check the tightening torque of the hub nut (900 Nm).
4.Place the dial gauge as shown in the photograph
5.Pull and push alternately to tilt the wheel. Perform the check throughout the entire range of rotation.

**If a tilt play greater than 0.22 mm is obtained, replace the wheel hub!**

Check the EBS fault records related to wheel sensors. Intermittent signal failure or reading failure may indicate a problem in the wheel hub due to play.

### Check for grease leaks

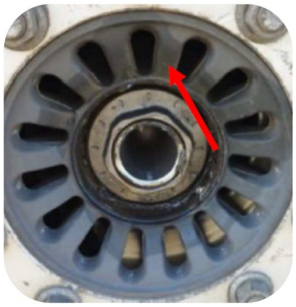

1.Visually inspect the exterior appearance of the hub ventilation channels. If they are stained with grease, it would indicate that all the internal grease of the bearing has been expelled and it is “dry”.
2.Carefully remove the hubcap.
3.Check for any grease leakage inside. If present, it would indicate that all the bearing grease has been expelled.
***There may be a small amount of grease around the seals. This situation is normal and does not indicate a problem.***



**SITUATION OK**

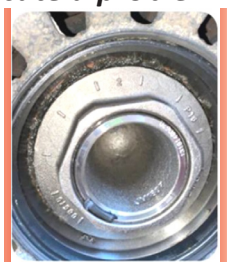

**SITUATION NO OK**




### Bearing noise check

1.Lift the wheel. Do not disassemble!
2.Carefully remove the hubcap.
3.Check the tightening torque of the hub nut (900 Nm).
4.Rotate the wheel in both directions (slowly and quickly).
5.If the wheel does not turn smoothly and/or if a “grinding noise” is heard, hub replacement will be necessary.
**Noises can also originate from the brakes. Therefore, we advise performing this check by removing the brake pads**

# Brake wear check

## Disk Brake

| Measures of break disk wear disk brake | | |
|---|---|---|
| Ø(mm) | «A»new (mm) | «B» The wear limit has been reached (mm) |
| 430 | 45 | 37 |
| 377 | 45 | 37 |

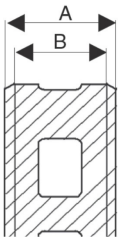


| Brake pad wear measurements | | | | | |
|---|---|---|---|---|---|
| «c»new (mm) | | | «D» The wear limit has been reached (mm) | | |
| Disk brake pad Ø 430 | | | | | |
| Haldex | Wabco | Knorr | Haldex | Wabco | Knorr |
| 30 | 32 | 30 | 13 | 11 | 9 |
| Disk brake pad Ø 377 | | | | | |
| Haldex | Wabco | Knorr | Haldex | Wabco | Knorr |
| 30 | 32 | 30 | 13 | 11 | 9 |

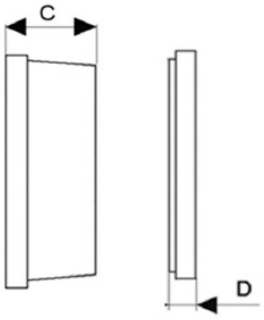


## Drum brake

Checking the condition of the brake shoes by removing the inspection plug. The minimum permissible
wear value is indicated by the set of numbers painted on the shoe.

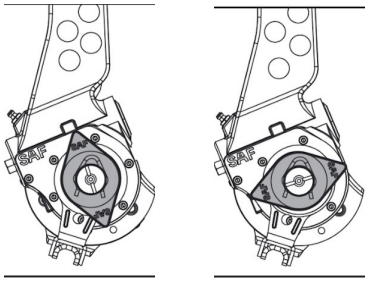

NEW WORN

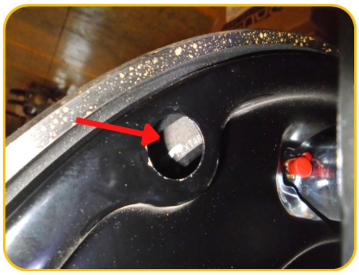

| DRUM WEAR MEASUREMENTS | | |
|---|---|---|
| Brake dimensions | Ø original | Ø Maximum allowable wear |
| SNK 300 X 200 | Ø 300 | Ø 304 |
| SNK 367 X 180 | Ø 367 | Ø 372 |
| SNK 367 X 200 | Ø 367 | Ø 372 |
| SNK 420 X 180 | Ø 420 | Ø 425 |
| SNK 420 X 200 | Ø 420 | Ø 425 |



## Additional checks

### Diapers / Torque lifters





- Visually inspect the condition of the diaphragm rubber.
- Ensure there are no air leaks.

### Shock absorbers and stabilizers




- Check the condition of the shock absorber.
- Ensure there is no oil leakage.

### Brake chambers and actuators




- Check for any air leaks in the brake and parking chamber.
- Visually inspect the push rod and dust boot.

## POINTS TO GREASE

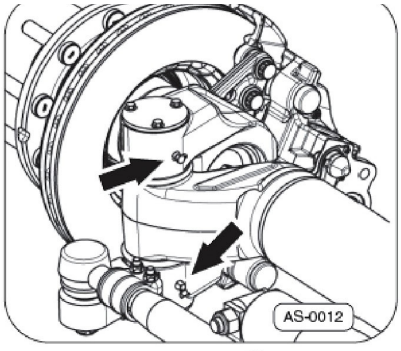

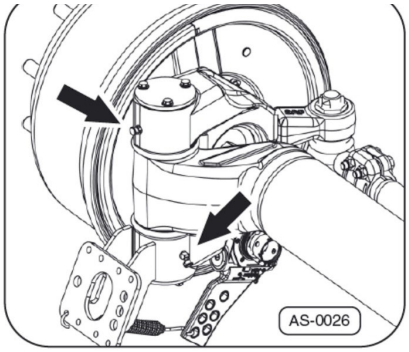

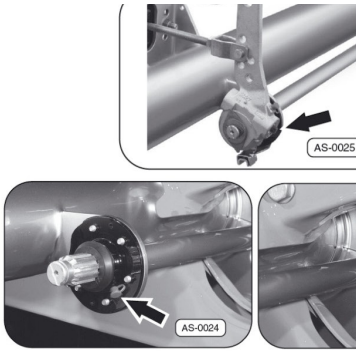


***NOTE! To prevent premature wear:***

- ***Use exclusively lithium-based lubricant. Ref. 05 387 0031 04***
- ***Apply grease with the vehicle unloaded.***
- ***Do not apply grease to other points not prescribed***

# Verification of tightening torques

## SAF INTRA

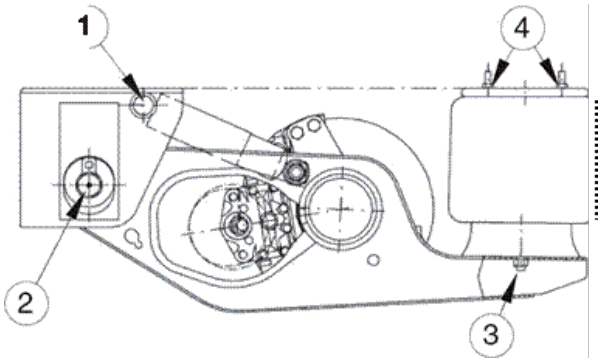


| Pos. | Unión atornillada | Par de comprobación (Nm) | Boca de llave |
|---|---|---|---|
| 1 | M20x1,5 | 600 | 30 |
| 2 | M30 | 1200 | 46 |
| 3 | M16 | 80 | 24 |
| 4 | M12 | 40 | 19 |

***NOTE! For aluminum and stainless steel fastening brackets, check bolted joints 1 - 2 every 6 MONTHS***

## SAF MODUL

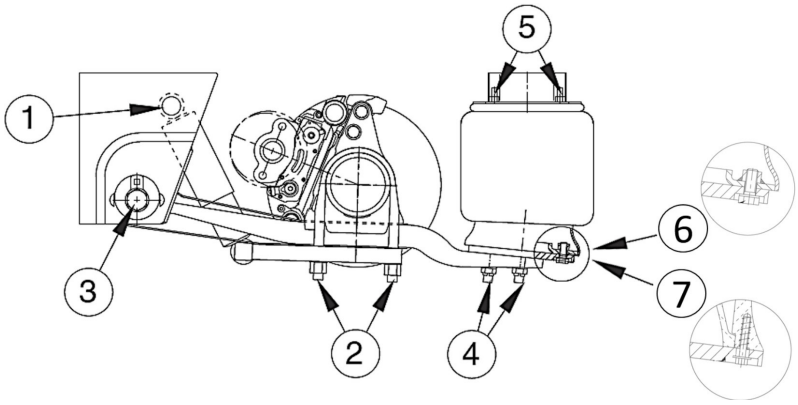


| Pos. | Bolted joint | Verification torque(Nm) | Wrench socket |
|---|---|---|---|
| 1 | M24x2 | 400 | 36 |
| 2 | M22x1,5 | 580 | 32 |
| 3 | M30 | 1200 | 46 |
| 4 | M20 | 180 | 30 |
| 5 | M12 | 40 | 19 |
| 6 (2) | M12 | 80 | 19 |
| 7 (3) | K100x40 | 20 | 10 |

(2) In the case of a steel piston
(3) In the case of a plastic component

# Maintenance plan for SAF axles Check List

## > Wheel hubs

| Grease leaks | | | | |
|---|---|---|---|---|
| | LEFT | | RIGHT | |
| | YES | NO | YES | NO |
| 1º axle | □ | □ | □ | □ |
| 2º axle | □ | □ | □ | □ |
| 3º axle | □ | □ | □ | □ |
| 4º axle | □ | □ | □ | □ |
| 5º axle | □ | □ | □ | □ |

| Noises or play in the bearings | | | | |
|---|---|---|---|---|
| | LEFT | | RIGHT | |
| | YES | NO | YES | NO |
| 1º axle | □ | □ | □ | □ |
| 2º axle | □ | □ | □ | □ |
| 3º axle | □ | □ | □ | □ |
| 4º axle | □ | □ | □ | □ |
| 5º axle | □ | □ | □ | □ |

## Brake system condition

| Checking the condition of brake pads / shoes | | | | |
|---|---|---|---|---|
| | LEFT | | RIGHT | |
| 1º axle | | | | |
| 2º axle | | | | |
| 3º axle | | | | |
| 4º axle | | | | |
| 5º axle | | | | |

| Checking the condition of brake discs / drums | | | | |
|---|---|---|---|---|
| | LEFT | | RIGHT | |
| 1º axle | | | | |
| 2º axle | | | | |
| 3º axle | | | | |
| 4º axle | | | | |
| 5º axle | | | | |

## Otras comprobaciones

| Component | Check | Yes | No | 1I | 1D | 2I | 2R | 3I | 3D |
|---|---|---|---|---|---|---|---|---|---|
| diaphragms | Extension/Compression | □ | □ | | | | | | |
| | Cracked diaphragm | □ | □ | | | | | | |
| | Wear due to friction | □ | □ | | | | | | |
| | Air loss | □ | □ | | | | | | |
| Shock absorbers | Oil loss | □ | □ | | | | | | |
| | Damaged body | □ | □ | | | | | | |
| Chambers and actuators | Air loss | □ | □ | | | | | | |
| | Damaged push rod or dust boot | □ | □ | | | | | | |

# Tightening torques

## SAF MODUL

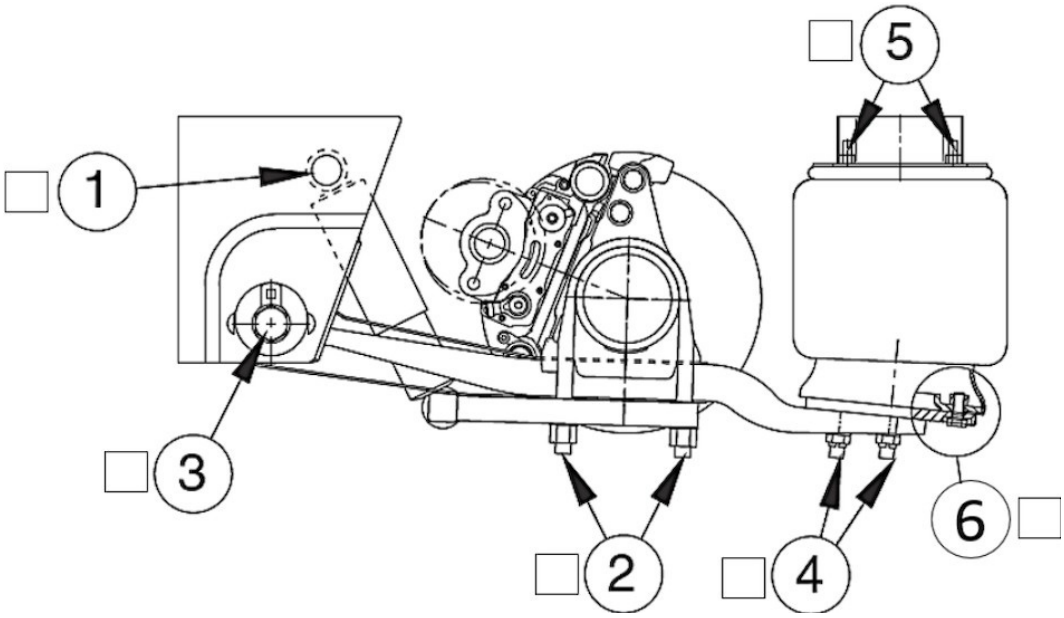


## SAF INTRA

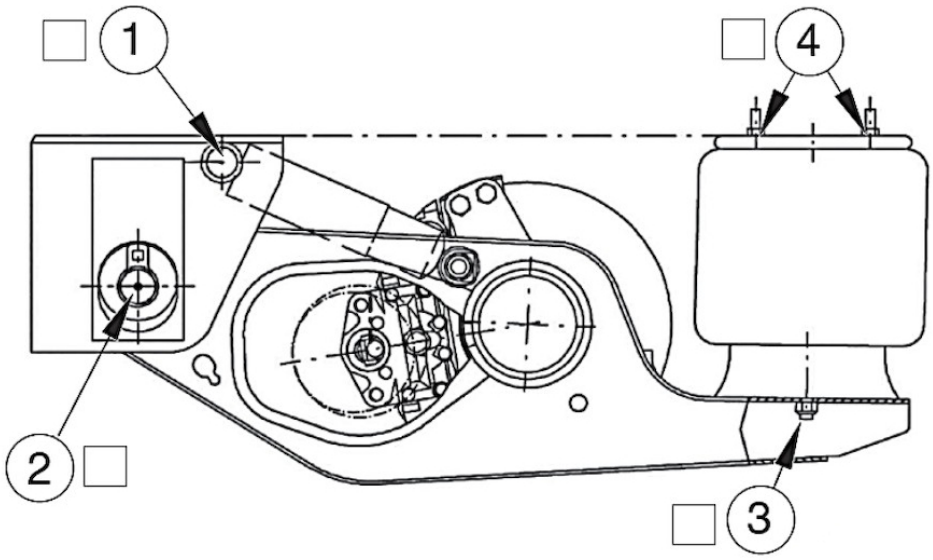



***PAY ATTENTION TO MAINTENANCE, GREASING,..ETC. OVER THE AXLES. THIS IS SHOWN IN THE MAINTENANCE BOOK WE ENCLOSE.***



***IT IS IMPORTANT TO DO FIRST MAINTENANCE OVER ALL BOLTS OF FIXATIONS AND BOLTS, RIGHT AFTER FIRST TRANSPORT WITH LOAD ON THE SEMITRAILER.***



***90% OF PROBLEMS ON AXLES AND SUSPENSIONS ARE ORIGINATED BY LACK OF TRACKING AND FOLLOW UP OF THESE INSTRUCTIONS. NOT FOLLOWING THE INSTRUCTIONS IT WILL CONSIDER A USE MALFUNCTION , AND WILL FORCE TO VOID WARRANTY FOR THE UNIT.***



***IMPORTANT: AFTER 1ST CHECK-UP, THE INSPECTION FORM SHEET HAS TO BE FILLED IN AND SIGNED, AND SEND EMAIL TO : service@rojotrailer.com, ATTACHING THE TECHNICAL DATA SHEET.***

IN CASE OF DOUBT OR IF YOU NEED ANY FURTHER INFORMATION ABOUT MAINTENANCE, PLEASE CONTACT OUR AFTER-SALES DEPARTMENT Tlf. +34 947 54 64 11.